GENERAL NOTES:

1. END RETENTION IMPACT PROTECTIVE SYSTEM (L.M.I) SHOWN ON THIS PRODUCT EVALUATION DOCUMENT (P.E.D.) HAS BEEN VERIFIED FOR COMPLIANCE IN ACCORDANCE WITH THE 2026 (9th EDITION) OF THE FLORIDA BUILDING CODE. THIS PRODUCT SYSTEM MAY BE INSTALLED AT HIGH VELOCITY HURRICANE ZONES.

   DESIGN WIND LOADS SHALL BE DETERMINED AS PER SECTIONS 1620 OF THE ABOVE MENTIONED CODES, USING ASCE 7–22 AND SHALL NOT EXCEED THE MAXIMUM (A.S.D.) DESIGN PRESSURE RATINGS INDICATED ON SHEETS 10, 11 & 15 THRU 19.

   IN ORDER TO VERIFY THE ABOVE CONDITION, ULTIMATE DESIGN WIND LOADS DETERMINED PER ASCE 7–22 SHALL BE FIRST REDUCED TO A.S.D. DESIGN WIND LOADS BY MULTIPLYING THEM BY 0.6 IN ORDER TO COMPARE THESE W/ MAX. (A.S.D.) DESIGN PRESSURE RATINGS INDICATED ON SHEETS 10, 11 & 15 THRU 19.

   IN ORDER TO VERIFY THAT COMPONENTS AND ANCHORS ON THIS P.E.D. AS TESTED WERE NOT OVER STRESSED, A 33% INCREASE IN ALLOWABLE STRESS FOR WIND LOADS WAS NOT USED IN THEIR ANALYSIS. FASTENERS SPACING TO WOOD HAS BEEN DETERMINED IN ACCORDANCE WITH AWC/ NDS–24.
   ROLL–UP HURRICANE ABATEMENT ADEQUACY FOR IMPACT AND FATIGUE RESISTANCE HAS BEEN VERIFIED IN ACCORDANCE WITH SECTION 1626 OF THE ABOVE MENTIONED CODE AS PER FENESTRATION TESTING LAB. REPORTS # 5873 & 5894 AS PER TAS–201, TAS–202 AND TAS–203 PROTOCOLS. SEE NOTES *, Δ ON SHEETS 12 & 18 FOR ADDITIONAL LIMITATIONS.

2. ALL ALUMINUM EXTRUSIONS SHALL BE AS INDICATED ON SHEET 2.

3. EVERY OTHER SLAT SHALL INCLUDE WIND LOCKS AT EACH END (SEE COMPONENTS SHEET). EVERY SLAT (A) ADJACENT AND ABOVE BOTTOM SLAT (A1) MUST INCLUDE WIND LOCKS.

4. ALL SCREWS (EXCEPT COMPONENT (C1)) TO BE STAINLESS STEEL 304 OR 316 SERIES WITH 50 ksi YIELD STRENGTH AND 90 ksi TENSILE STRENGTH OR CORROSION RESISTANT COATED CARBON STEEL AS PER DIN 50018. ALL S.D.S. ARE TEK SCREWS MANUFACTURED BY ITW BUILDEX & SHALL COMPLY W/ FLORIDA BUILDING CODE SECTIONS 2411.3.3.4 & 1711.

5. BOLTS TO BE ASTM A–307, GALVANIZED OR AISI 304 OR 316 SERIES STAINLESS STEEL WITH 36 ksi MINIMUM YIELD STRENGTH AND SHALL COMPLY WITH SECTION 1711.

6. ANCHORS TO WALL FOR (B1) (B2) (B3) & (B4) SIDE RAILS SHALL BE AS FOLLOWS: (UNLESS OTHERWISE NOTED) *

   (A) TO EXISTING POURED CONCRETE: MIN. f'c = 2899 p.s.i. COMPRESSIVE STRENGTH.

   –5/16"ø CARBON STEEL TAPCON XL ANCHORS W/SILVER CLIMASEAL AS MANUFACTURED BY ITW BUILDEX, INC OR 3/8"ø S.S KWIK BOLT 3 BY HILTI INC.

   A.1) MINIMUM EMBEDMENT OF TAPCON XL OR KWIK BOLT 3 ANCHORS INTO POURED CONCRETE SHALL BE 2 3/8". NO EMBEDMENT INTO STUCCO SHALL BE CONSIDERED AS PART OF THE REQUIRED EMBEDMENT.

   A.2) MINIMUM EDGE DISTANCE (E.D.) OF TAPCON XL OR KWIK BOLT 3 ANCHORS INTO POURED CONCRETE SHALL BE 4". EDGE DISTANCE IS BEYOND ANY FINISH MATERIAL.

   A.3) IN CASE THAT PRECAST STONE, PRECAST CONCRETE OR BRICK PANELS, VENEER OR PAVERS BE FOUND ON THE EXISTING WALL, ANCHORS SHALL BE LONG ENOUGH TO REACH THE MAIN SUBSTRATE BEHIND SUCH PANELS. MINIMUM EMBEDMENT SHALL BE AS INDICATED ON NOTE A.1 ABOVE.

   (B) TO EXISTING GROUT FILLED CELL CONCRETE BLOCK WALL: ASTM C–90

   –5/16"ø CARBON STEEL TAPCON XL W/SILVER CLIMASEAL ANCHORS, AS MANUFACTURED BY ITW BUILDEX, INC OR ⅜"Ø S.S. KWIK BOLT 3 BY HILTI INC.

   B.1) MINIMUM EMBEDMENT OF TAPCON XL OR KWIK BOLT 3 ANCHORS, INTO THE GROUT FILLED CELL CONCRETE BLOCK UNIT SHALL BE 2 1/4". NO EMBEDMENT INTO STUCCO SHALL BE CONSIDERED AS PART OF THE REQUIRED EMBEDMENT.

   B.2) MINIMUM EDGE DISTANCE (E.D.) OF TAPCON XL OR KWIK BOLT 3 ANCHORS INTO GROUT FILLED CELL CONCRETE BLOCK SHALL BE 4". EDGE DISTANCE IS BEYOND ANY FINISH MATERIAL

   B.3) IN CASE THAT PRECAST STONE, PRECAST CONCRETE OR BRICK PANELS, VENEER OR PAVERS BE FOUND ON THE EXISTING WALL, ANCHORS SHALL BE LONG ENOUGH TO REACH THE MAIN SUBSTRATE BEHIND SUCH PANELS. MINIMUM EMBEDMENT SHALL BE AS INDICATED ON NOTE B.1 ABOVE.

   (C) TO EXISTING WOOD FRAME BUILDING: SOUTHERN PINE #2 W/ G=0.55 MIN., DOUGLAS FIR–SOUTH (G=0.46) OR SPRUCE PINE–FIR SOUTH, (G=0.36).

   –5/16"ø ULTRACON SS4 ANCHORS, AS MANUFACTURED BY DEWALT INC.

   C.1) MINIMUM PENETRATION OF ULTRACON ANCHORS, INTO THE WOOD FRAME UNIT SHALL BE 2 1/2". (MUST INCLUDE 2" THREADED LENGTH) NO PENETRATION INTO STUCCO SHALL BE CONSIDERED AS PART OF THE REQUIRED PENETRATION.

   C.2) MINIMUM EDGE DISTANCE (E.D.) OF ULTRACON ANCHORS, INTO WOOD SHALL BE 2". EDGE DISTANCE IS BEYOND ANY FINISH MATERIAL

   C.3) IN CASE THAT PRECAST STONE, PRECAST CONCRETE OR BRICK PANELS, VENEER OR PAVERS BE FOUND ON THE EXISTING WALL, ANCHORS SHALL BE LONG ENOUGH TO REACH THE MAIN SUBSTRATE BEHIND SUCH PANELS. MINIMUM THREADED PENETRATION SHALL BE AS INDICATED ON NOTE C.1 ABOVE.

*** ONLY STAINLESS STEEL ANCHORS ARE ALLOWED AT INSTALLATIONS WITHIN 300ft OF THE COASTAL SHORELINE.**

7. ANCHORS SHALL BE INSTALLED FOLLOWING ALL OF THE RECOMMENDATIONS AND SPECIFICATIONS OF THE ANCHOR'S MANUFACTURER.

8. ANCHORS REQUIRED FOR MULLION CONNECTIONS SHALL BE AS SPECIFIED ON APPLICABLE SECTIONS SHOWN ON SHEETS 13 & 14 RESPECTIVELY.

   –3/4"ø KWIK BOLT 3, S.S EXPANSION ANCHOR TO BE AS MANUFACTURED BY HILTI, INC.

   MINIMUM EDGE DISTANCE AND SPACING FOR ABOVE MENTIONED ANCHORS SHALL BE AS INDICATED BELOW OR AT ABOVE MENTIONED SHEET. EDGE DISTANCE AND EMBEDMENTS ARE BEYOND ANY FINISH MATERIAL.

ANCHOR	SPACING @ 100%	EDGE DISTANCE @ 100%	EMBEDMENT	
			CONCRETE	GROUT FILLED OR CONCRETE BLOCK
KWIK BOLT 3	27"	9"	4 3/4" (3000 psi)	–

9. ROLL–UP MECHANISM NOT PART OF THIS APPROVAL.

10. IT SHALL BE THE RESPONSIBILITY OF THE CONTRACTOR TO VERIFY THE SOUNDNESS OF THE STRUCTURE WHERE SHUTTER IS TO BE ATTACHED TO INSURE PROPER ANCHORAGE. THIS SHUTTER SHALL ONLY BE ATTACHED TO CONCRETE, GROUT FILLED CELL CONCRETE BLOCK OR WOOD FRAME BUILDINGS.

11. THIS PRODUCT INSTALLATION SHALL COMPLY WITH SPECS INDICATED IN THIS DRAWING PLUS ANY BUILDING AND ZONING REGULATIONS PROVIDED BY THE JURISDICTION WHERE PERMIT IS APPLIED TO.

12. THE INSTALLATION CONTRACTOR IS TO SEAL/CAULK ALL PRODUCT COMPONENT EDGES WHICH REMAIN IN CONTINUOUS CONTACT WITH THE BUILDING TO PREVENT WIND/RAIN INTRUSION. CAULK AND SEAL SHUTTER TRACKS ALL AROUND FULL LENGTH.

13. (a) THIS P.E.D. PREPARED BY THIS ENGINEER IS GENERIC AND DOES NOT PROVIDE INFORMATION FOR A SITE SPECIFIC PROJECT; i.e. WHERE THE SITE CONDITIONS DEVIATE FROM THE P.E.D.

    (b) CONTRACTOR TO BE RESPONSIBLE FOR THE SELECTION, PURCHASE AND INSTALLATION INCLUDING LIFE SAFETY OF THIS PRODUCT, BASED ON THIS P.E.D. PROVIDED HE/SHE DOES NOT DEVIATE FROM THE CONDITIONS DETAILED ON THIS DOCUMENT. CONSTRUCTION SAFETY AT SITE IS THE CONTRACTOR'S RESPONSIBILITY.

    (c) THIS P.E.D. WILL BE CONSIDERED INVALID IF ALTERED BY ANY MEANS.

    (d) SITE SPECIFIC PROJECTS SHALL BE PREPARED BY A REGISTERED ENGINEER OR ARCHITECT WHICH WILL BECOME THE ENGINEER OF RECORD (E.O.R.) FOR THE PROJECT AND WHO WILL BE RESPONSIBLE FOR THE PROPER USE OF THE P.E.D. ENGINEER OF RECORD, ACTING AS A DELEGATED ENGINEER TO THE P.E.D. ENGINEER, SHALL SUBMIT TO THIS LATTER THE SITE SPECIFIC DRAWINGS FOR REVIEW.

    (e) ORIGINAL P.E.D. SHALL BEAR THE DATE AND ORIGINAL SEAL AND SIGNATURE OF THE PROFESSIONAL ENGINEER OF RECORD THAT PREPARED IT.

12. SHUTTER MANUFACTURER'S LABEL SHALL BE LOCATED ON A READILY VISIBLE LOCATION AT STORM PANEL IN ACCORDANCE WITH SECTION 1709.9.3 OF FLORIDA BUILDING CODE. ONE LABEL SHALL BE PLACED FOR EVERY OPENING. LABELING TO COMPLY WITH SECTION 1709.9.2 OF THE FLORIDA BUILDING CODE.

THIS DRAWING SHALL ONLY BE USED TO OBTAIN PERMITS IN THE STATE OF FLORIDA

WALTER A. TILLIT JR. LICENSE No. 44167 STATE OF FLORIDA PROFESSIONAL ENGINEER

9/24/2026

P.E. SEAL/SIGNATURE/DATE

©2026 TILTECO INC.

TILTECO INC.
TILLIT TESTING & ENGINEERING COMPANY
6355 N.W. 36th. St., Ste. 305 – VIRGINIA GARDENS, Fl. 33166
Phone : (305) 871–1530 , Fax : (305) 871–1531
e–mail: tilteco@aol.com
CA–0006719
WALTER A. TILLIT Jr., P.E.
FLORIDA Lic. # 44167

FLORIDA BUILDING CODE. (High Velocity Hurricane Zone)

RLL 55-X SLAT END RETENTION IMPACT PROTECTIVE SYSTEM (L.M.I)

ROLLAC SHUTTER OF TEXAS, INC.

5331 ORANGE STREET
PEARLAND, TX. 77581
PH:(281) 485-1911, FAX:(281) 485-0839

REV N°	DESCRIPTION	DATE	REV N°	DESCRIPTION	DATE
1	OLD 25–055	09/24/26	3		
2			4		

W.H
DRAWN BY

09/24/2026
DATE

26–301
DRAWING N°

SHEET 1 OF 19

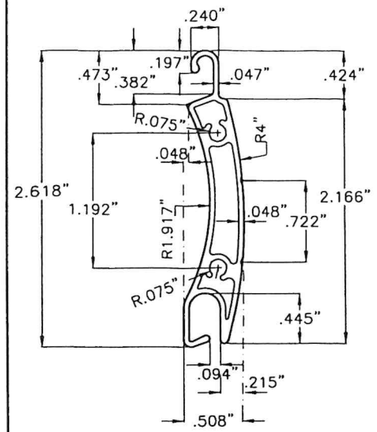

(A) SLAT

6061-T6 OR 6005-T5 ALUMINUM ALLOY
SCALE: 3/4" = 1"

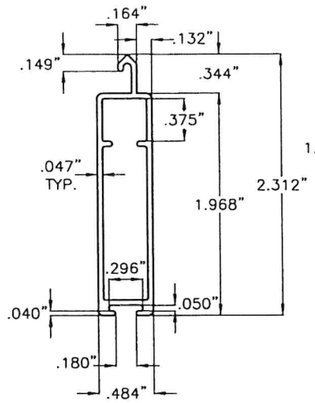

(A1) BOTTOM SLAT

6063-T6 ALUMINUM ALLOY
SCALE: 3/4"=1"

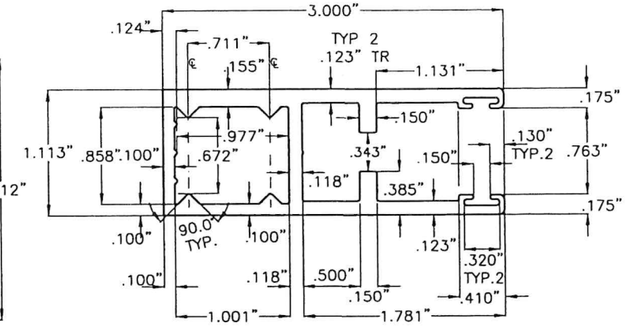

(B1) TYPE 1 SIDE RAIL

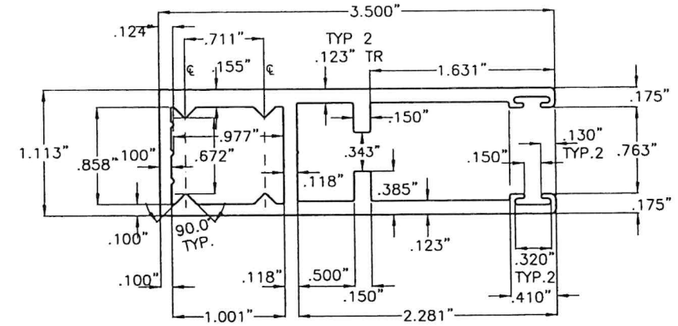

(B3) TYPE 3 SIDE RAIL

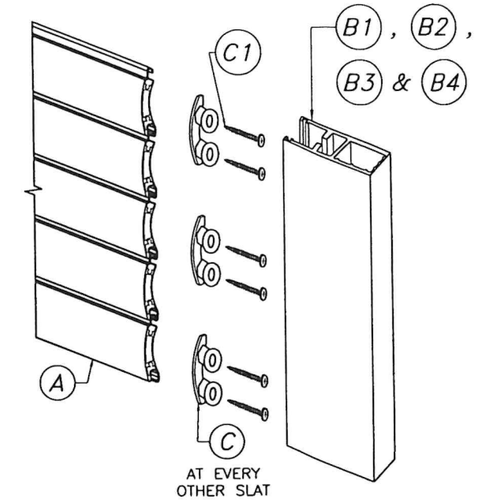

SLAT ASSEMBLY DETAIL:
N.T.S.

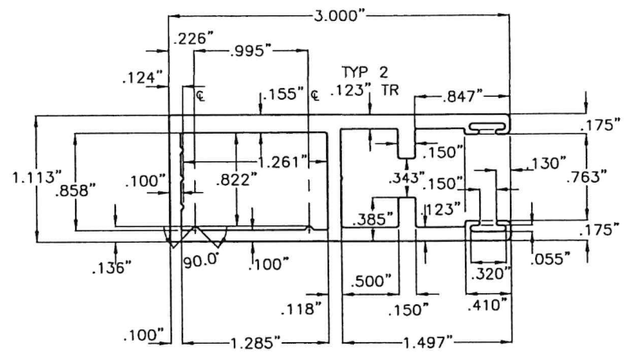

(B2) TYPE 2 SIDE RAIL

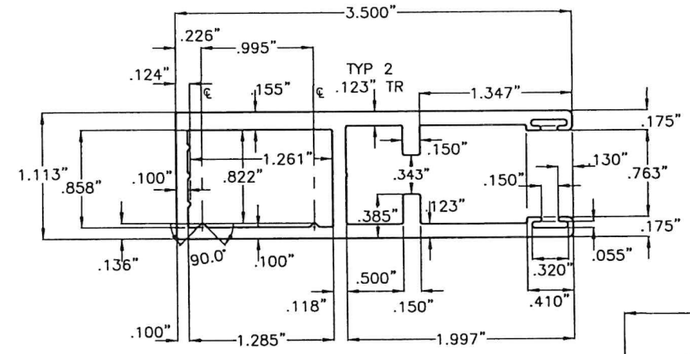

(B4) TYPE 4 SIDE RAIL

SIDE RAILS:
6005-T5 ALUMINUM ALLOY
SCALE: 3/4" = 1"

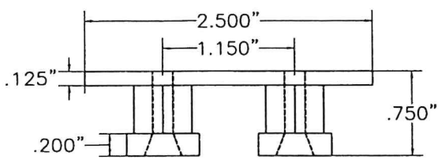

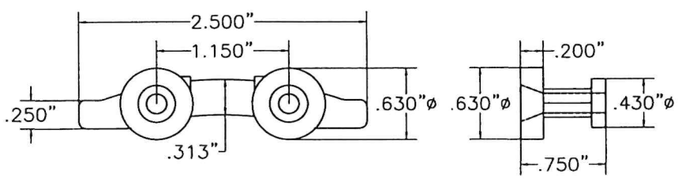

(C) WIND LOCK:
RIGID NYLON Ftu = 5001 psi.
SCALE: 3/4" = 1"

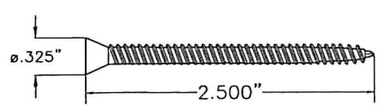

(C1) WIND LOCK SCREW:
(2) #8-18 x 2 1/2" F.H. S.S. AISI 410 SERIES, COATED WITH ROLLAC-1000 CHROMED-FREE ANTI-CORROSION COATING SYSTEM; MANUFACTURED AND APPLIED BY SUN BELT COATING, LLC
(Min. Fy = 121.1 ksi, Min. Ftu = 164.6 ksi)
SCALE: 3/4" = 1"

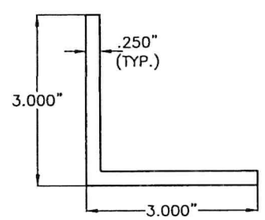

(D) ALUMINUM INSIDE MOUNT ANGLE
6063-T6 ALUMINUM ALLOY
SCALE: 3/8" = 1"

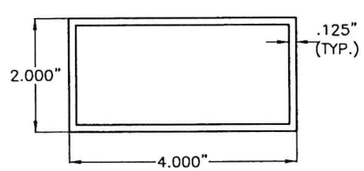

(E) ALUMINUM BUILD-OUT TUBE
6063-T6 ALUMINUM ALLOY
SCALE: 3/8" = 1"

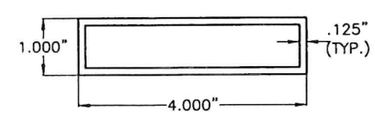

(E1) ALUMINUM BUILD-OUT TUBE
6063-T6 ALUMINUM ALLOY
SCALE: 3/8" = 1"

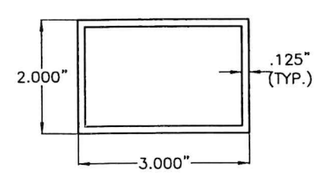

(E2) ALUMINUM BUILD-OUT TUBE
6063-T6 ALUMINUM ALLOY
SCALE: 3/8" = 1"

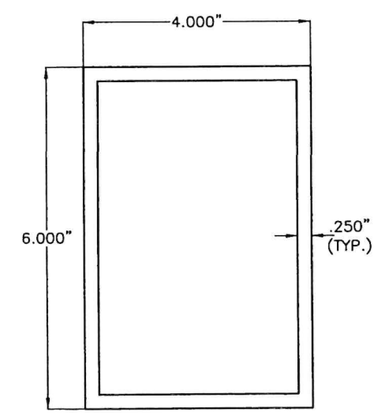

(F) TYPE 1 MULLION
6061-T6 ALUMINUM ALLOY
SCALE: 3/8" = 1"

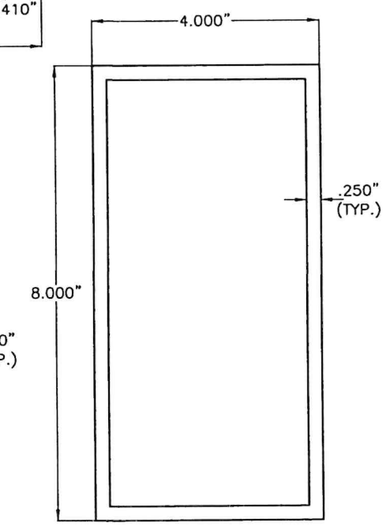

(G) TYPE 2 MULLION
6061-T6 ALUMINUM ALLOY
SCALE: 3/8" = 1"

FLORIDA BUILDING CODE. (High Velocity Hurricane Zone)

WALTER A. TILLIT Jr. LICENSE No. 44167 STATE OF FLORIDA PROFESSIONAL ENGINEER

P.E. SEAL/SIGNATURE/DATE

©2026 TILTECO INC.

TILTECO INC.
TILLIT TESTING & ENGINEERING COMPANY
6355 N.W. 36th. St., Ste. 305 – VIRGINIA GARDENS, Fl. 33166
Phone : (305) 871-1530 , Fax : (305) 871-1531
e-mail: tilteco@aol.com
CA-0006719
WALTER A. TILLIT Jr., P.E.
FLORIDA Lic. # 44167

RLL 55-X SLAT END RETENTION IMPACT PROTECTIVE SYSTEM (L.M.I)

ROLLAC SHUTTER OF TEXAS, INC.
5331 ORANGE STREET
PEARLAND, TX. 77581
PH:(281) 485-1911, FAX:(281) 485-0839

REV N°	DESCRIPTION	DATE	REV N°	DESCRIPTION	DATE
1	OLD 25-055	09/24/26	3		
2			4		

W.H
DRAWN BY

09/24/2026
DATE

26-301
DRAWING N°

SHEET 2 OF 19

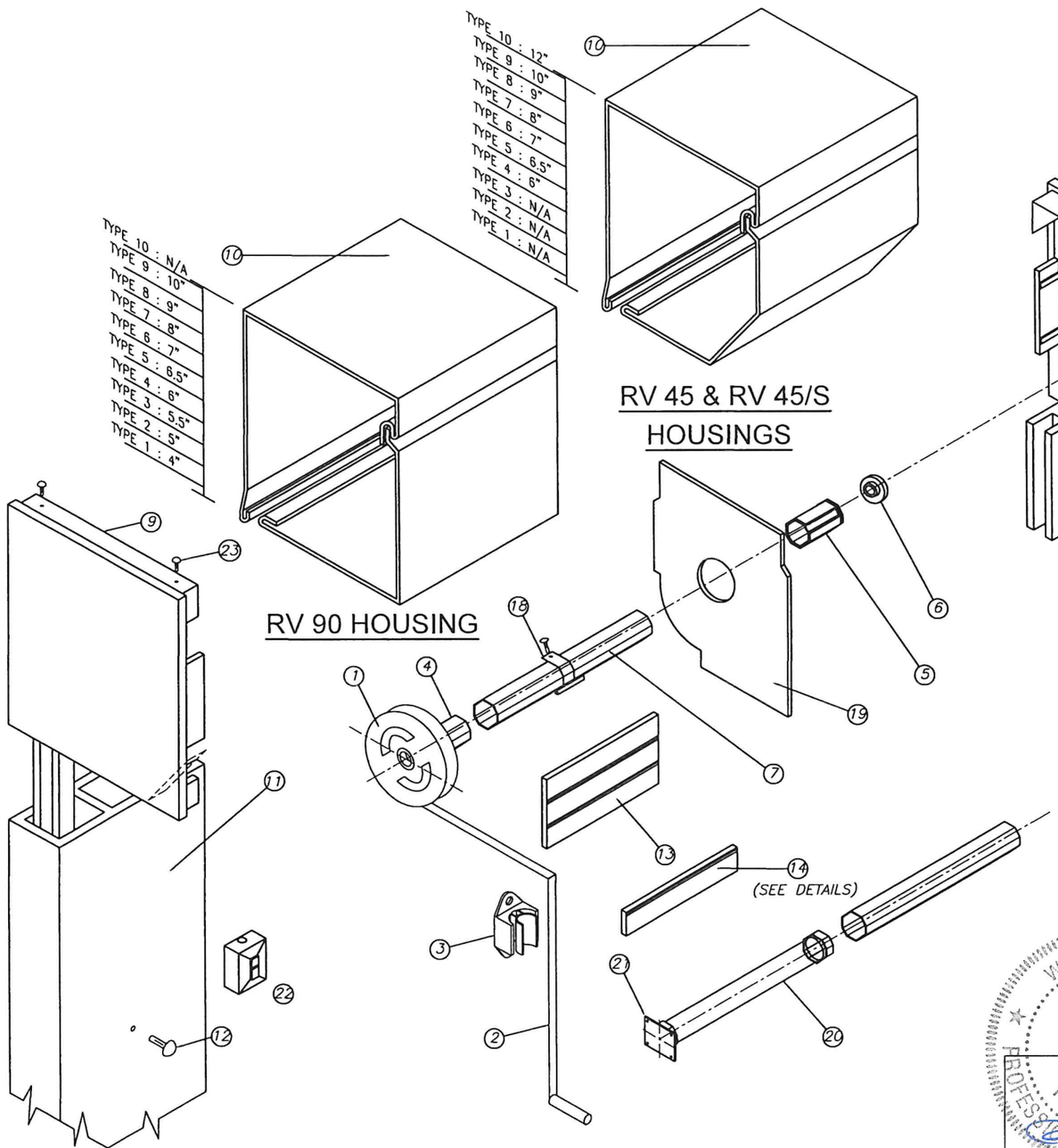

(H) BOX COMPONENTS AND ASSEMBLY DETAIL END CAP SYSTEM

(SEE NOTE 9 ON SHEET 1)

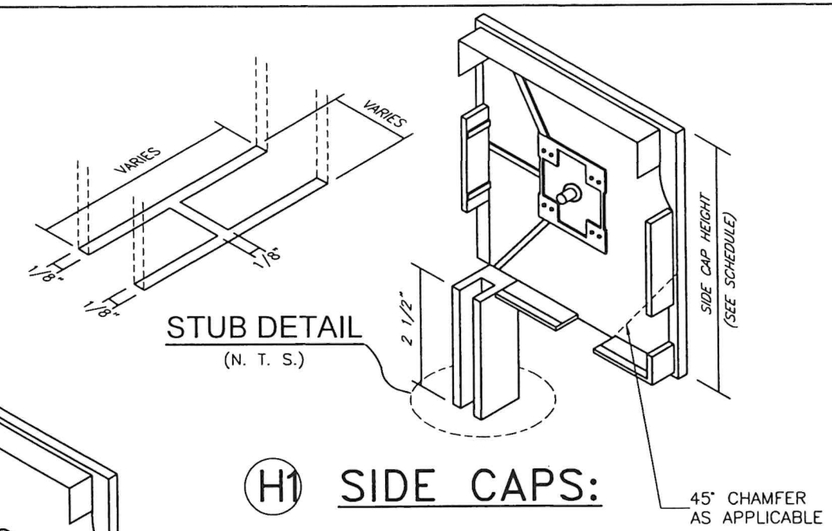

(H1) SIDE CAPS:

COMPONENTS FOR GEAR OPERATED SYSTEM

(1) – GEAR
(2) – UNIVERSAL & CRANK
(3) – CRANK HOLDER(OPTIONAL)
(4) – GEAR INSERT(GEAR TO AXLE CONNECTOR)
(5) – IDLER INSERT
(6) – BALL BEARING
(7) – OCTAGONAL AXLE *
(9) – SIDE/END CAP *
(10) – HOUSING(FRONT & BOTTOM), 0.040" THICK
(11) – SIDE RAIL
(12) – PLUG–BUTTOMS
(13) – ALUMINUM SLATS
(14) – BASE SLAT
(15) – PLASTIC STOPS(OPTIONAL)
(16) – SIDE LOCKS(OPTIONAL)
(17) – STAPLES(OPTIONAL)
(18) – SPRINGLOCK HANGER
(19) – SAFETY PLATES

ADDITIONAL COMPONENTS FOR MOTORIZED OPERATED SYSTEM

(20) – TUBULAR MOTOR
(21) – MOTOR BRACKET
(22) – SWITCH

FASTENERS

(23) – 3/16" ALUMINUM POP RIVETS(6 REQ'D EA. SIDE CAP) : 2 @ TOP, 2 @ REAR, 2@ BOTTOM

* SHALL BE CAPABLE TO SUSTAIN SLAT'S WEIGHT AND ASSURE LIFTING MECHANISM (SEE NOTE 9/1)

FLORIDA BUILDING CODE. (High Velocity Hurricane Zone)

WALTER A. TILLIT JR. LICENSE No. 44167 STATE OF FLORIDA PROFESSIONAL ENGINEER

9/24/2026

P.E. SEAL/SIGNATURE/DATE

©2026 TILTECO INC.

TILTECO INC.
TILLIT TESTING & ENGINEERING COMPANY
6355 N.W. 36th. St., Ste. 305 – VIRGINIA GARDENS, Fl. 33166
Phone : (305) 871–1530 , Fax : (305) 871–1531
e–mail: tilteco@aol.com
CA–0006719
WALTER A. TILLIT Jr., P.E.
FLORIDA Lic. # 44167

RLL 55-X SLAT END RETENTION IMPACT PROTECTIVE SYSTEM (L.M.I)

ROLLAC SHUTTER OF TEXAS, INC.
5331 ORANGE STREET
PEARLAND, TX. 77581
PH:(281) 485-1911, FAX:(281) 485-0839

REV N°	DESCRIPTION	DATE	REV N°	DESCRIPTION	DATE
1	OLD 25–055	09/24/26	3		
2			4		

W.H
DRAWN BY

09/24/2026
DATE

26–301
DRAWING N°

SHEET 3 OF 19

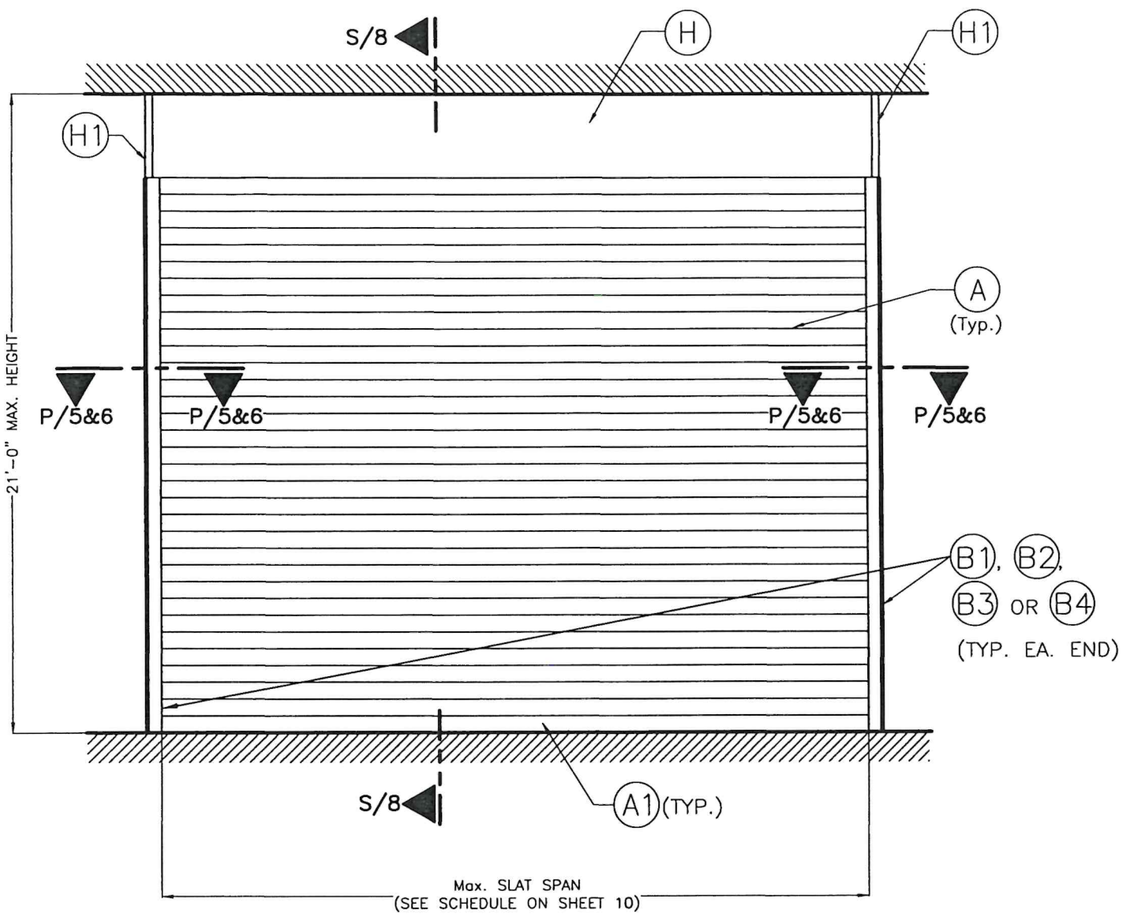

TYPICAL SINGLE UNIT ELEVATION: INSTALLATION INTO POURED CONCRETE, GROUT FILLED CELL CONCRETE BLOCK & WOOD

NOTES: SEE SHEETS 2 & 3 FOR COMPONENTS NOMENCLATURE.
N.T.S

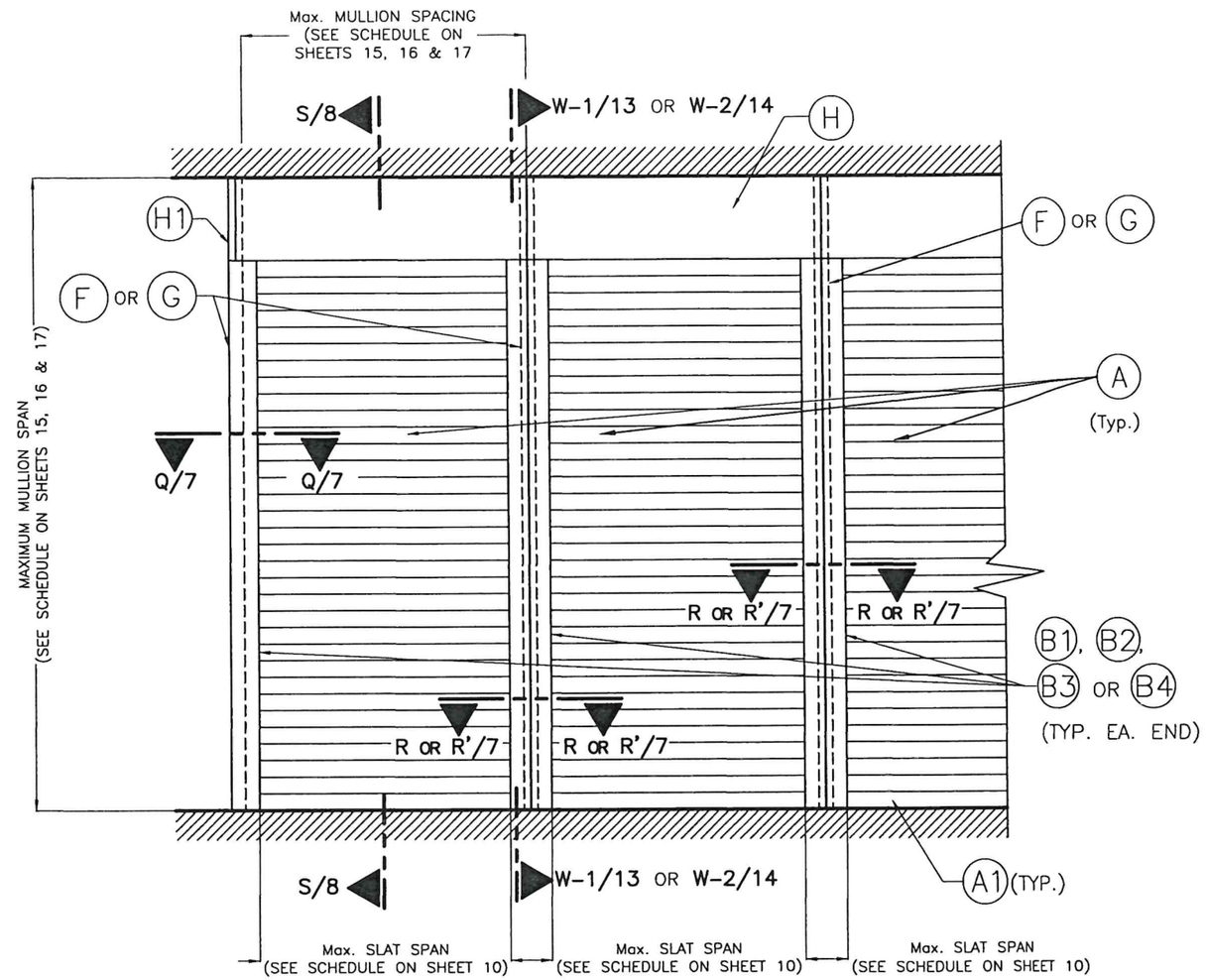

TYPICAL CONSECUTIVE SINGLE UNIT ELEVATION W/ MULLIONS: INSTALLATION INTO POURED CONCRETE

NOTES: SEE SHEETS 2 & 3 FOR COMPONENTS NOMENCLATURE.
N.T.S

FLORIDA BUILDING CODE. (High Velocity Hurricane Zone)

WALTER A. TILLIT JR. LICENSE No. 44167 STATE OF FLORIDA PROFESSIONAL ENGINEER

P.E. SEAL/SIGNATURE/DATE

©2026 TILTECO INC.

TILTECO INC.
TILLIT TESTING & ENGINEERING COMPANY
6355 N.W. 36th. St., Ste. 305 – VIRGINIA GARDENS, Fl. 33166
Phone : (305) 871-1530 , Fax : (305) 871-1531
e-mail: tilteco@aol.com
CA-0006719
WALTER A. TILLIT Jr., P.E.
FLORIDA Lic. # 44167

RLL 55-X SLAT END RETENTION IMPACT PROTECTIVE SYSTEM (L.M.I)

ROLLAC SHUTTER OF TEXAS, INC.
5331 ORANGE STREET
PEARLAND, TX. 77581
PH:(281) 485-1911, FAX:(281) 485-0839

REV N°	DESCRIPTION	DATE	REV N°	DESCRIPTION	DATE
1	OLD 25-055	09/24/26	3		
2			4		

W.H
DRAWN BY

09/24/2026
DATE

26-301
DRAWING N°

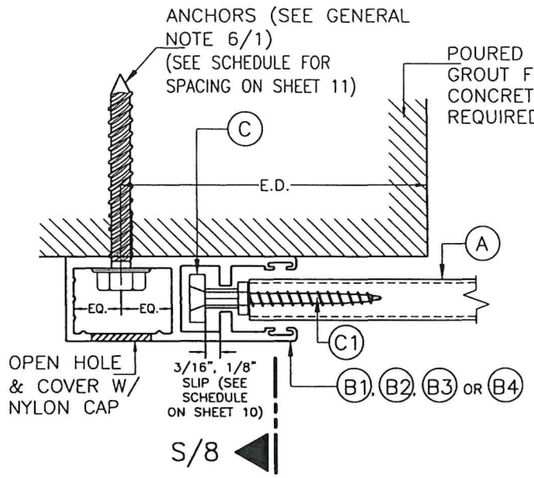

SECTION P–P (1):
WALL MOUNT

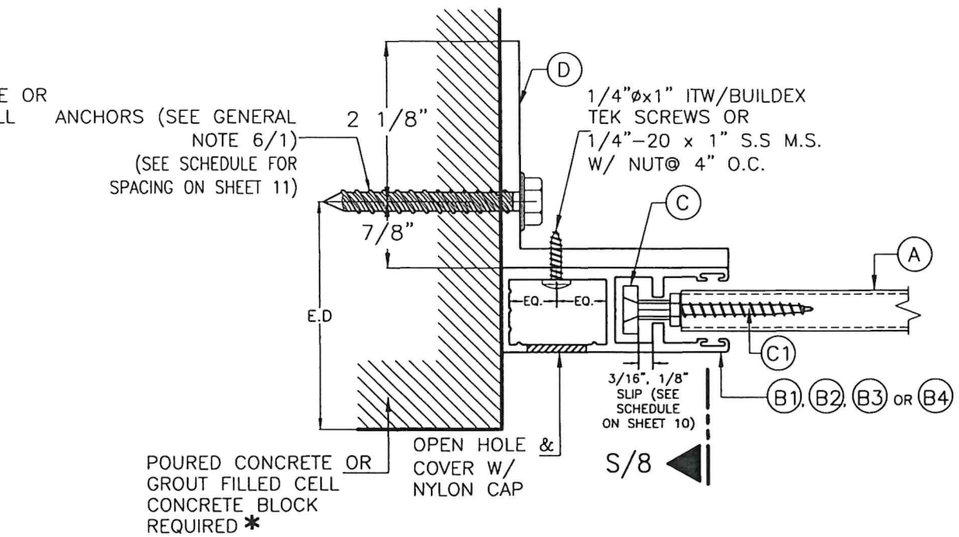

SECTION P–P (2):
INSIDE WALL MOUNT

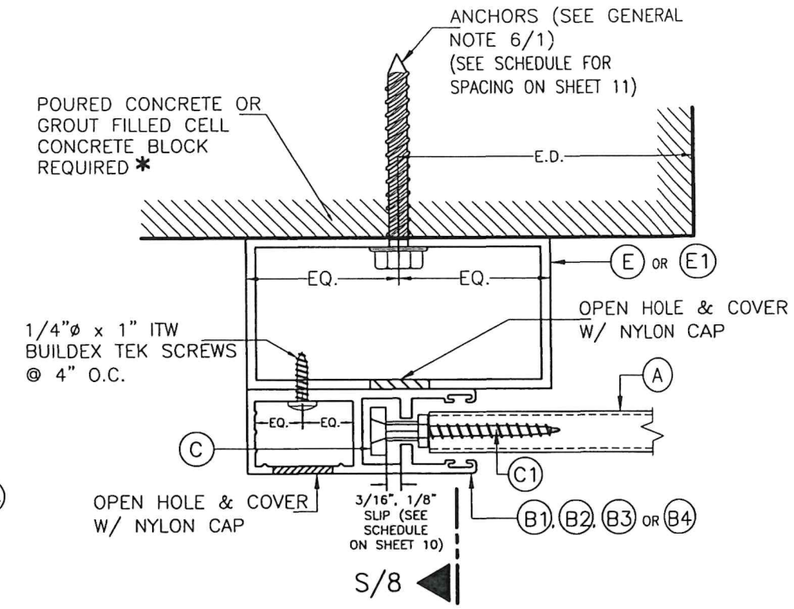

SECTION P–P (3):
BUILD–OUT MOUNT

SIDE RAIL CONNECTIONS TO POURED CONCRETE OR GROUT FILLED CELL CONCRETE BLOCK

SCALE: 1/2" = 1"

FLORIDA BUILDING CODE. (High Velocity Hurricane Zone)

WALTER A. TILLIT JR. LICENSE No. 44167 STATE OF FLORIDA PROFESSIONAL ENGINEER

P.E. SEAL/SIGNATURE/DATE

©2026 TILTECO INC.

TILTECO INC.
TILLIT TESTING & ENGINEERING COMPANY
6355 N.W. 36th. St., Ste. 305 – VIRGINIA GARDENS, Fl. 33166
Phone : (305) 871–1530 , Fax : (305) 871–1531
e–mail: tilteco@aol.com
CA–0006719
WALTER A. TILLIT Jr., P.E.
FLORIDA Lic. # 44167

RLL 55-X SLAT END RETENTION IMPACT PROTECTIVE SYSTEM (L.M.I)

ROLLAC SHUTTER OF TEXAS, INC.
5331 ORANGE STREET
PEARLAND, TX. 77581
PH:(281) 485-1911, FAX:(281) 485-0839

REV N°	DESCRIPTION	DATE	REV N°	DESCRIPTION	DATE
1	OLD 25–055	09/24/26	3		
2			4		

W.H
DRAWN BY

09/24/2026
DATE

26–301
DRAWING N°

SHEET 5 OF 19

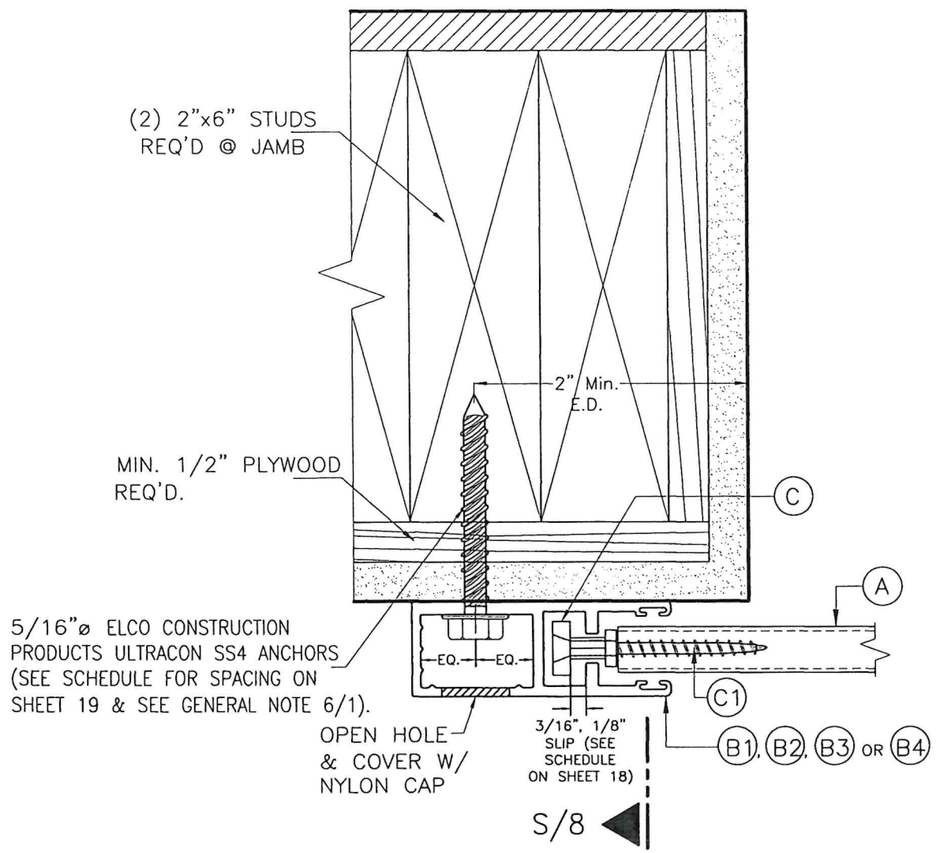

SECTION P–P (1):
WALL MOUNT

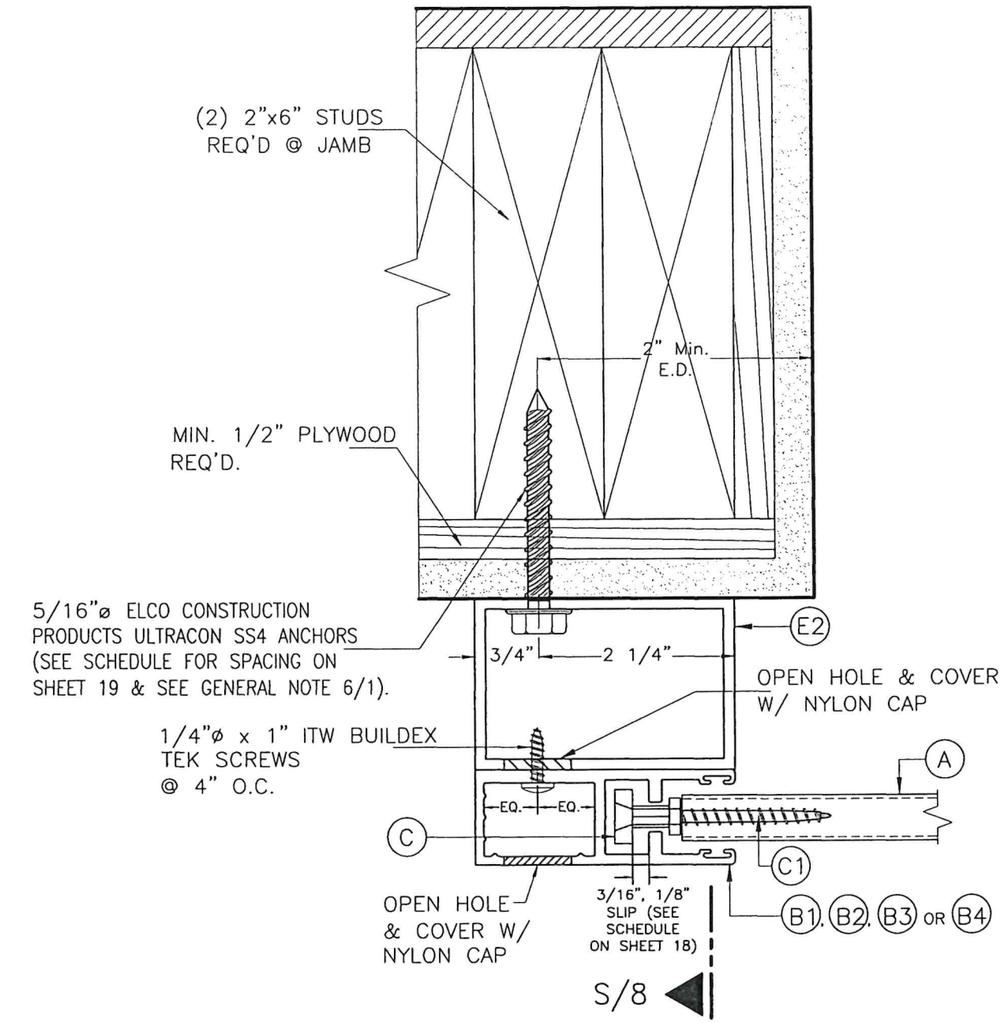

SECTION P–P (2):
BUILD–OUT MOUNT

SIDE RAIL CONNECTIONS TO WOOD WALL

SCALE: 1/2" = 1"

FLORIDA BUILDING CODE. (High Velocity Hurricane Zone)

WALTER A. TILLIT JR. LICENSE No. 44167 STATE OF FLORIDA PROFESSIONAL ENGINEER

P.E. SEAL/SIGNATURE/DATE

©2026 TILTECO INC.

TILTECO INC.
TILLIT TESTING & ENGINEERING COMPANY
6355 N.W. 36th. St., Ste. 305 – VIRGINIA GARDENS, Fl. 33166
Phone : (305) 871–1530 , Fax : (305) 871–1531
e–mail: tilteco@aol.com
CA–0006719
WALTER A. TILLIT Jr., P.E.
FLORIDA Lic. # 44167

RLL 55-X SLAT END RETENTION
IMPACT PROTECTIVE SYSTEM (L.M.I)

ROLLAC SHUTTER OF TEXAS, INC.
5331 ORANGE STREET
PEARLAND, TX. 77581
PH:(281) 485-1911, FAX:(281) 485-0839

REV N°	DESCRIPTION	DATE	REV N°	DESCRIPTION	DATE
1	OLD 25–055	09/24/26	3		
2			4		

W.H
DRAWN BY

09/24/2026
DATE

26–301
DRAWING N°

SHEET 6 OF 19

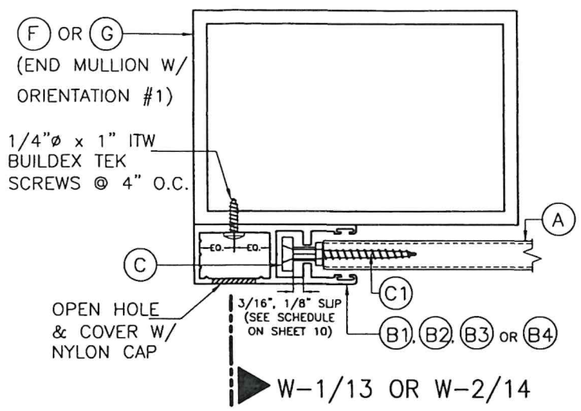

SECTION Q-Q:
MULLION MOUNT (FACE MOUNT)

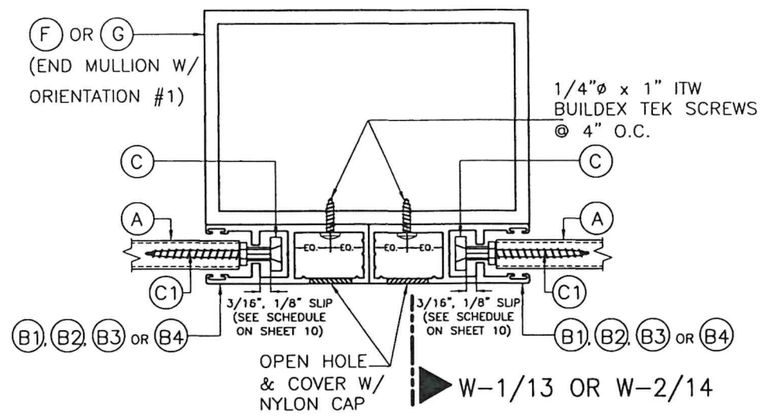

SECTION R-R:
MULLION MOUNT (FACE MOUNT)

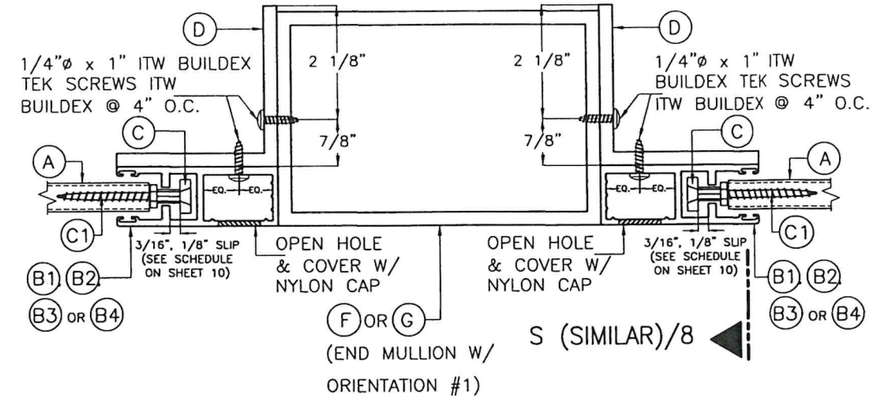

SECTION R'-R':
MULLION MOUNT (INSIDE MOUNT)

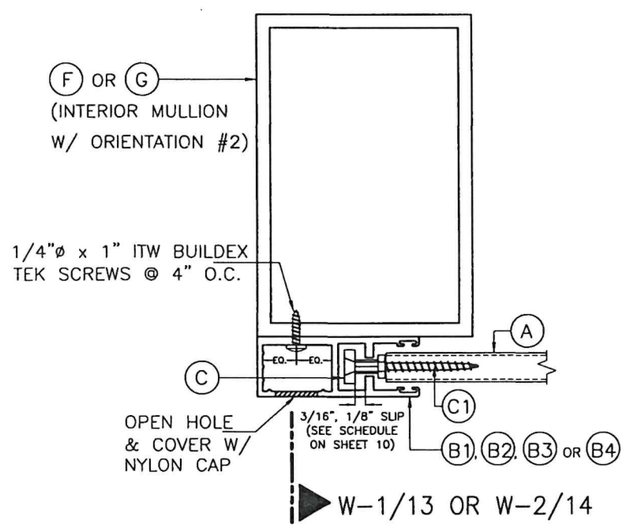

SECTION Q-Q:
MULLION MOUNT (FACE MOUNT)

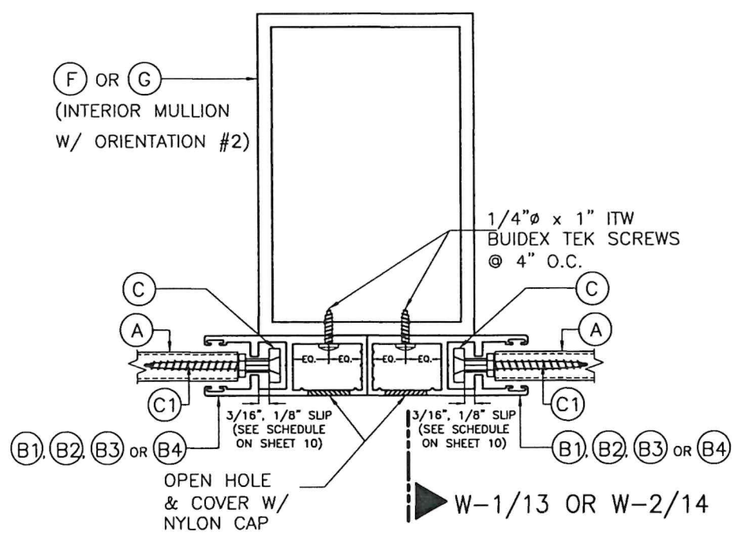

SECTION R-R:
MULLION MOUNT (FACE MOUNT)

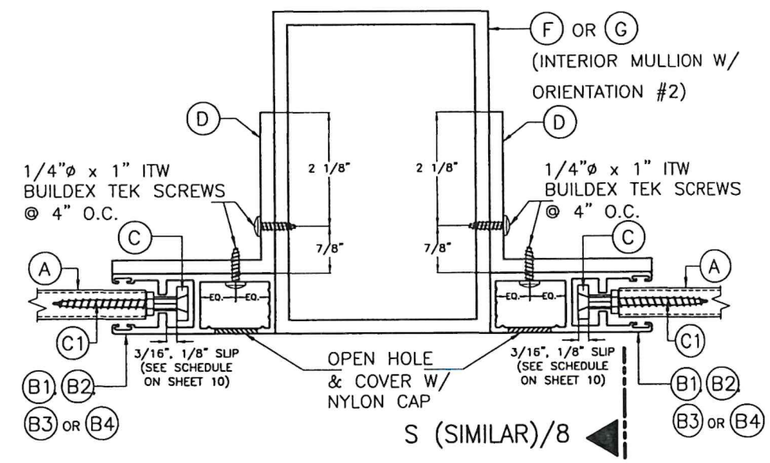

SECTION R'-R':
MULLION MOUNT (INSIDE MOUNT)

SIDE RAIL CONNECTION TO MULLIONS

SCALE: 3/8" = 1"

WALTER A. TILLIT JR. LICENSE No. 44167 STATE OF FLORIDA PROFESSIONAL ENGINEER

6/24/2026

P.E. SEAL/SIGNATURE/DATE

©2026 TILTECO INC.

TILTECO INC.
TILLIT TESTING & ENGINEERING COMPANY
6355 N.W. 36th. St., Ste. 305 – VIRGINIA GARDENS, Fl. 33166
Phone : (305) 871-1530 , Fax : (305) 871-1531
e-mail: tilteco@aol.com
CA-0006719
WALTER A. TILLIT Jr., P.E.
FLORIDA Lic. # 44167

FLORIDA BUILDING CODE. (High Velocity Hurricane Zone)

RLL 55-X SLAT END RETENTION
IMPACT PROTECTIVE SYSTEM (L.M.I)

ROLLAC SHUTTER OF TEXAS, INC.

5331 ORANGE STREET
PEARLAND, TX. 77581
PH:(281) 485-1911, FAX:(281) 485-0839

REV N°	DESCRIPTION	DATE	REV N°	DESCRIPTION	DATE
1	OLD 25-055	09/24/26	3		
2			4		

W.H
DRAWN BY

09/24/2026
DATE

26-301
DRAWING N°

SHEET 7 OF 19

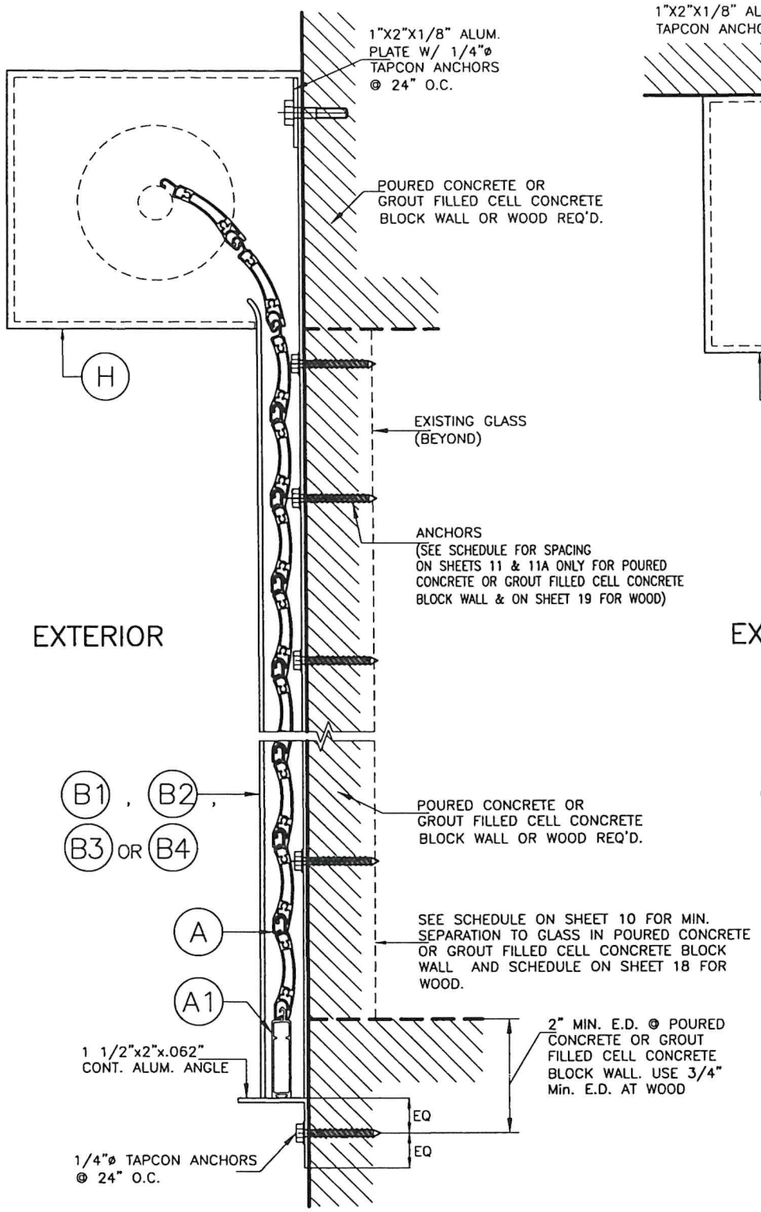

WALL MOUNTING

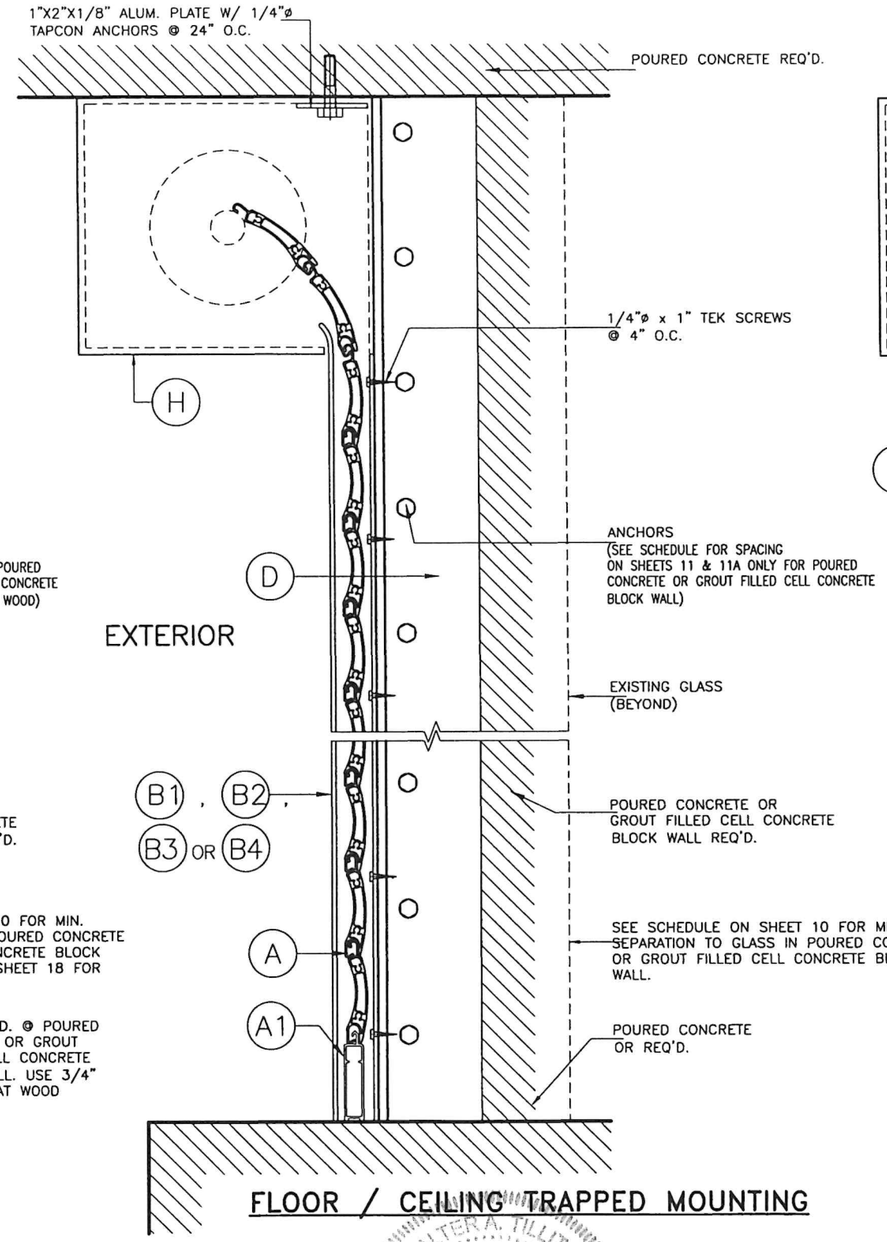

FLOOR / CEILING TRAPPED MOUNTING

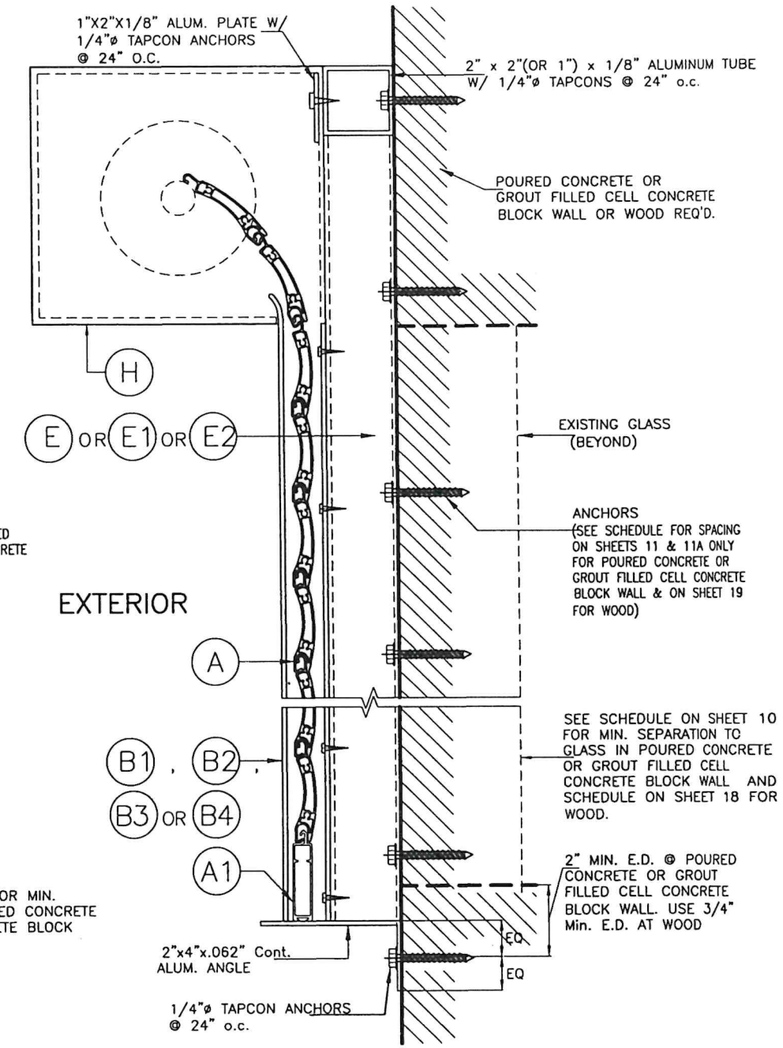

BUILD-OUT MOUNTING

SECTION S-S

N.T.S

INSTALLATION DETAILS ON EXISTING POURED CONCRETE OR GROUT FILLED CELL CONCRETE BLOCK WALL OR WOOD

FLORIDA BUILDING CODE. (High Velocity Hurricane Zone)

WALTER A. TILLIT JR. LICENSE No. 44167 STATE OF FLORIDA PROFESSIONAL ENGINEER 9/24/2026

P.E. SEAL/SIGNATURE/DATE

©2026 TILTECO INC.

TILTECO INC.
TILLIT TESTING & ENGINEERING COMPANY
6355 N.W. 36th. St., Ste. 305 – VIRGINIA GARDENS, Fl. 33166
Phone : (305) 871-1530 , Fax : (305) 871-1531
e-mail: tilteco@aol.com
CA-0006719
WALTER A. TILLIT Jr., P.E.
FLORIDA Lic. # 44167

RLL 55-X SLAT END RETENTION IMPACT PROTECTIVE SYSTEM (L.M.I)

ROLLAC SHUTTER OF TEXAS, INC.

5331 ORANGE STREET
PEARLAND, TX. 77581
PH:(281) 485-1911, FAX:(281) 485-0839

REV N°	DESCRIPTION	DATE	REV N°	DESCRIPTION	DATE
1	OLD 25-055	09/24/26	3		
2			4		

W.H
DRAWN BY

09/24/2026
DATE

26-301
DRAWING N°

SHEET 8 OF 19

TYPICAL MANDATORY PROCEDURE FOR VERIFYING PRODUCT'S CODE COMPLIANCE RELATED TO ITS INSTALLATION INTO EXISTING POURED CONCRETE OR GROUT FILLED CELL CONCRETE BLOCK STRUCTURES (*)

STEP 1:

OBTAIN JOB SITE'S A.S.D. DESIGN LOAD (p.s.f.) FOR THE OPENING AND DESIRED PRODUCT SPAN "L" (ft) TO PROTECT IT (SEE GENERAL NOTE #1, ON SHEET 1).

STEP 2:

ENTER TO CHARTS I THRU II ON SHEET 10 TO DETERMINE, BASED ON AN 3/16" SLAT SLIP (in); A.S.D. DESIGN LOAD (p.s.f.); AND EXISTING SUBSTRATE, PRODUCT MAX. SPAN "L" (ft).

THE FOLLOWING INFORMATION IS PROVIDED AT CHARTS I THRU II TO PROCEED WITH PRODUCT INSTALLATION VERIFICATION:

- ENTER A.S.D. DESIGN LOAD: SEE STEP (1) ABOVE.
- FOR A SPECIFIC PRODUCT MOUNTING INSTALLATION TYPE, THE FOLLOWING DEFINITIONS FOR SLAT SPAN SHALL BE CONSIDERED:

LMAX: THIS IS THE MAXIMUM ALLOWABLE PRODUCT SPAN FOR WHICH A 3/16" SLAT SLIP MAY BE USED, FOR A GIVEN A.S.D. DESIGN LOAD.

- MINIMUM REQUIRED SEPARATION TO GLASS IS PROVIDED ON CHARTS I, II: PROVIDES SEPARATION TO GLASS FOR PRODUCTS WITH OR WITHOUT MULLIONS.

STEP 3:

OBTAIN INFORMATION ON PRODUCT'S SIDE RAIL ANCHOR SPACING REQUIREMENTS FOR CONNECTION TO EXISTING STRUCTURE FROM ANCHOR SCHEDULES IV AND V ON SHEETS 11 & 11A. ENTER SCHEDULE WITH FINALLY DETERMINED SUBSTRATE, MOUNTING TYPE, A.S.D. DESIGN LOAD & PRODUCT SPAN AND OBTAIN MAXIMUM ANCHOR SPACING (INCHES ON CENTERS). SEE GENERAL NOTE 6 ON SHEET 1 FOR ANCHOR SPECS.

STEP 4:

IF PRODUCT INSTALLATION INCLUDES MULLIONS, THE FOLLOWING MANDATORY ADDITIONAL PROCEDURE IS APPLICABLE.

PROCEDURE 4a: IF MULLIONS ARE USED

1. MINIMUM SEPARATION TO GLASS FOR SLATS IF MULLIONS ARE USED SHALL BE BASED ON CHARTS I, II & III ON SHEET 10. IT SHALL BE MEASURED FROM BACK OF SLATS TO GLASS.
2. ENTER SCHEDULES 1a THRU 2c ON SHEETS 15, 16 & 17 W/ A.S.D. DESIGN LOAD; MAXIMUM MULLION SPACING (MAX., 12' OR 7'), AND DETERMINE MAXIMUM MULLION SPAN (HEIGHT) W/ ALLOWABLE INTERPOLATION IN BETWEEN SPACINGS FOR A GIVEN Ⓕ & Ⓖ, MULLION TYPE & MULLION ORIENTATION.
3. SEE SHEETS 13 & 14 FOR REQUIRED MULLION CONNECTION DETAILS AT TOP & BOTTOM FOR FLOOR TO CEILING (TRAPPED) OR WALL MOUNTINGS OF MULLIONS INTO CONCRETE FOR A GIVEN MULLION TYPE Ⓕ & Ⓖ.

* PROCEDURE PER STEPS 1 THRU 3 IS SIMILAR FOR INSTALLATIONS INTO WOOD FRAME STRUCTURES. SEE SHEETS 18 & 19 FOR LIMITATIONS APPLICABLE TO INSTALLATIONS INTO WOOD FRAME STRUCTURES.

WALTER A. TILLIT JR. LICENSE No. 44167 STATE OF FLORIDA PROFESSIONAL ENGINEER

9/24/2026

P.E. SEAL/SIGNATURE/DATE

©2026 TILTECO INC.

TILTECO INC.
TILLIT TESTING & ENGINEERING COMPANY
6355 N.W. 36th. St., Ste. 305 – VIRGINIA GARDENS, Fl. 33166
Phone : (305) 871-1530 , Fax : (305) 871-1531
e-mail: tilteco@aol.com
CA-0006719
WALTER A. TILLIT Jr., P.E.
FLORIDA Lic. # 44167

FLORIDA BUILDING CODE. (High Velocity Hurricane Zone)

RLL 55-X SLAT END RETENTION IMPACT PROTECTIVE SYSTEM (L.M.I)

ROLLAC SHUTTER OF TEXAS, INC.

5331 ORANGE STREET
PEARLAND, TX. 77581
PH:(281) 485-1911, FAX:(281) 485-0839

REV N°	DESCRIPTION	DATE	REV N°	DESCRIPTION	DATE
1	OLD 25-055	09/24/26	3		
2			4		

W.H
DRAWN BY

09/24/2026
DATE

26-301
DRAWING N°

SHEET 9 OF 19

SLAT PERFORMANCE CHARTS I & II:

VALID FOR INSTALLATION INTO POURED CONCRETE, GROUT FILLED CELL CONCRETE BLOCK OR MULLIONS

FOR A GIVEN A.S.D. DESIGN PRESSURE RATING (p.s.f.) AND SHUTTER MOUNT CONDITION

CHART I (ONLY VALID FOR 3/16" SLIP) /CONCRETE

USE MAXIMUM VALUE BETWEEN POSITIVE AND NEGATIVE A.S.D. LOAD — USE MAXIMUM POSITIVE A.S.D. LOAD VALUE

MAXIMUM A.S.D. DESIGN PRESSURE RATING (p.s.f.)	MAX. SLAT SPAN				MIN. SEPARATION TO GLASS (in)
	WALL MOUNT (SEE NOTES*)	TRAPPED MOUNT (SEE NOTES*)	BUILD-OUT MOUNT W/ (E1) (SEE NOTES*)	BUILD-OUT MOUNT W/ (E) (SEE NOTES*)	
30.0	19'-8"	19'-8"	16'-6"	13'-11"	10"
35.0	18'-3"	18'-3"	14'-11"	12'-7"	
40.0	16'-8"	16'-8"	13'-7"	11'-6"	
45.0	15'-3"	15'-3"	12'-6"	10'-9"	
50.0	14'-3"	14'-3"	11'-8"	10'-0"	
55.0	13'-3"	13'-3"	11'-0"	9'-6"	
60.0	12'-6"	12'-6"	10'-4"	9'-0"	
65.0	11'-11"	11'-11"	9'-10"	8'-6"	8 3/4"
70.0	11'-5"	11'-5"	9'-5"	8'-2"	
75.0	10'-11"	10'-11"	9'-0"	7'-11"	
80.0	10'-5"	10'-5"	8'-8"	7'-7"	
85.0	10'-0"	10'-0"	8'-3"	7'-4"	
90.0	9'-6"	9'-6"	8'-0"	7'-1"	
95.0	9'-3"	9'-2"	7'-9"	6'-11"	
100.0	8'-11"	8'-10"	7'-6"	6'-9"	
105.0	8'-9"	8'-6"	7'-3"	6'-6"	
110.0	8'-6"	8'-3"	7'-1"	6'-5"	
115.0	8'-3"	8'-0"	6'-11"	6'-3"	
120.0	8'-0"	7'-9"	6'-9"	6'-1"	
125.0	7'-10"	7'-6"	6'-7"	6'-0"	
130.0	7'-8"	7'-5"	6'-5"	5'-10"	
135.0	7'-6"	7'-2"	6'-3"	5'-9"	
140.0	7'-3"	7'-0"	6'-2"	5'-8"	
145.0	7'-2"	6'-10"	6'-0"	5'-6"	
150.0	7'-0"	6'-8"	6'-0"	5'-5"	
155.0	6'-10"	6'-6"	5'-10"	5'-4"	
160.0	6'-9"	6'-5"	5'-9"	5'-3"	6 1/2"

* NOTES:

1. ABOVE INDICATED MAX. SLAT SPANS MAY BE USED AS LONG AS ANCHOR SPACING SCHEDULES ON SHEET 11 INDICATE THAT A SPACING IS AVAILABLE FOR THE CORRESPONDING SLAT SPAN AND A.S.D. DESIGN PRESSURE RATING.
2. REQUIRES SIDE RAILS FASTENED TO EXISTING STRUCTURE WITH ANCHORS PER GENERAL NOTE 6/1 INTO POURED CONCRETE OR 1/4"ø S.S TEK SCREWS AT MULLIONS CONNECTION VALID FOR WALL MOUNTED, INSIDE MOUNTED, AND BUILD-OUT MOUNTED.
3. MAXIMUM SLAT SPANS FOR INTERMEDIATE LOADS MAY BE DETERMINED BY LINEAR INTERPOLATION BETWEEN END VALUES.

CHART II (ONLY VALID FOR 3/16" SLIP) /BLOCK

USE MAXIMUM VALUE BETWEEN POSITIVE AND NEGATIVE A.S.D. LOAD — USE MAXIMUM POSITIVE A.S.D. LOAD VALUE

MAXIMUM A.S.D. DESIGN PRESSURE RATING (p.s.f.)	MAX. SLAT SPAN				MIN. SEPARATION TO GLASS (in)
	WALL MOUNT (SEE NOTES*)	TRAPPED MOUNT (SEE NOTES*)	BUILD-OUT MOUNT W/ (E1) (SEE NOTES*)	BUILD-OUT MOUNT W/ (E) (SEE NOTES*)	
30.0	17'-8"	17'-8"	14'-2"	12'-0"	10"
35.0	15'-10"	15'-10"	12'-7"	11'-0"	
40.0	14'-6"	14'-6"	11'-7"	10'-0"	
45.0	12'-11"	12'-11"	10'-9"	9'-5"	
50.0	12'-2"	12'-2"	9'-10"	8'-10"	
55.0	11'-3"	11'-3"	9'-6"	8'-4"	
60.0	10'-8"	10'-8"	9'-0"	8'-0"	8 3/4"
65.0	10'-3"	10'-3"	8'-6"	7'-8"	
70.0	9'-9"	9'-9"	8'-3"	7'-5"	
75.0	9'-4"	9'-4"	7'-10"	7'-0"	
80.0	9'-0"	8'-10"	7'-6"	6'-10"	
85.0	8'-6"	8'-6"	7'-5"	6'-8"	
90.0	8'-3"	8'-0"	7'-0"	6'-6"	
95.0	8'-0"	7'-10"	6'-10"	6'-4"	
100.0	7'-9"	7'-8"	6'-9"	6'-2"	
105.0	7'-6"	7'-5"	6'-7"	6'-0"	
110.0	7'-3"	7'-2"	6'-5"	5'-10"	
115.0	7'-2"	7'-0"	6'-3"	5'-9"	
120.0	7'-0"	6'-9"	6'-0"	5'-8"	
125.0	6'-10"	6'-7"	6'-0"	5'-6"	
130.0	6'-8"	6'-5"	5'-10"	5'-5"	
135.0	6'-7"	6'-4"	5'-9"	5'-4"	6 1/2"
140.0	6'-4"	6'-2"	5'-8"	5'-3"	
145.0	6'-3"	6'-5"	5'-7"	5'-2"	
150.0	6'-2"	5'-10"	5'-5"	5'-0"	
155.0	6'-0"	5'-9"	5'-4"	4'-11"	
160.0	5'-10"	5'-8"	5'-3"	4'-10"	

* NOTES:

1. ABOVE INDICATED MAX. SLAT SPANS MAY BE USED AS LONG AS ANCHOR SPACING SCHEDULES ON SHEET 11A INDICATE THAT A SPACING IS AVAILABLE FOR THE CORRESPONDING SLAT SPAN AND A.S.D. DESIGN PRESSURE RATING.
2. REQUIRES SIDE RAILS FASTENED TO EXISTING STRUCTURE WITH ANCHORS PER GENERAL NOTE 6/1 INTO GROUT FILLED CELL CONCRETE BLOCK CONNECTION VALID FOR WALL MOUNTED, INSIDE MOUNTED, AND BUILD-OUT MOUNTED.
3. MAXIMUM SLAT SPANS FOR INTERMEDIATE LOADS MAY BE DETERMINED BY LINEAR INTERPOLATION BETWEEN END VALUES.

FLORIDA BUILDING CODE. (High Velocity Hurricane Zone)

WALTER A. TILLIT JR. LICENSE No. 44167 STATE OF FLORIDA PROFESSIONAL ENGINEER

6/24/2026

P.E. SEAL/SIGNATURE/DATE

©2026 TILTECO INC.

TILTECO INC.
TILLIT TESTING & ENGINEERING COMPANY
6355 N.W. 36th. St., Ste. 305 – VIRGINIA GARDENS, Fl. 33166
Phone : (305) 871-1530 , Fax : (305) 871-1531
e-mail: tilteco@aol.com
CA-0006719
WALTER A. TILLIT Jr., P.E.
FLORIDA Lic. # 44167

RLL 55-X SLAT END RETENTION IMPACT PROTECTIVE SYSTEM (L.M.I)

ROLLAC SHUTTER OF TEXAS, INC.

5331 ORANGE STREET
PEARLAND, TX. 77581
PH:(281) 485-1911, FAX:(281) 485-0839

REV N°	DESCRIPTION	DATE	REV N°	DESCRIPTION	DATE
1	OLD 25-055	09/24/26	3		
2			4		

W.H
DRAWN BY

09/24/2026
DATE

26-301
DRAWING N°

MAX. ANCHOR'S SPACING SCHEDULE IV FOR A GIVEN PRODUCT MOUNTING TYPE W/ 5/16"ø ITW BUILDEX TAPCON XL OR HILTI INC 3/8"ø S.S KWIK BOLT 3 ANCHORS TO POURED CONCRETE WALL ♠

A.S.D. DESIGN PRESSURE RATING & SLAT SPAN RANGE

WALL MOUNT

MAX. A.S.D. DESIGN PRESSURE RATING RANGE	SLAT SPAN RANGE							
	0' to 4'	> 4' to 5'	> 5' to 6'	> 6' to 7'	> 7' to 9'	> 9' to 12'	> 12' to 16'	> 16' to 19'-8"
≤ 30.0	6.0"	6.0"	6.0"	8"	8"	7"	4 1/2"	4"
>31–40	6.0"	6.0"	6.0"	8"	8"	5"	4"	3 3/4"
>41–60	6.0"	6.0"	6.0"	8"	5 1/2"	4"	4"	–
>61–80	6.0"	6.0"	6.0"	6"	4"	3 3/4"	–	–
>81–105	6.0"	6.0"	6.0"	4 1/2"	3 3/4"	3 3/4"	–	–
>106–120	6.0"	6.0"	5 1/2"	4"	3 3/4"	–	–	–
>121–140	6.0"	6.0"	4 1/2"	3 3/4"	3 3/4"	–	–	–
>141–160	6.0"	6.0"	4"	3 3/4"	3 3/4"	–	–	–

TRAPPED MOUNT

MAX. A.S.D. DESIGN PRESSURE RATING RANGE	SLAT SPAN RANGE							
	0' to 4'	> 4' to 5'	> 5' to 6'	> 6' to 7'	> 7' to 9'	> 9' to 12'	> 12' to 16'	> 16' to 19'-8"
≤ 30.0	6"	6"	6"	8"	8"	6 1/2"	4 1/2"	4"
>31–40	6"	6"	6"	8"	7 1/2"	5"	4"	4"
>41–60	6"	6"	6"	7 1/2"	5"	3 3/4"	3 3/4"	–
>61–80	6"	6"	6"	5 1/2"	4"	3 3/4"	–	–
>81–105	6"	6"	6"	4"	3 3/4"	3 3/4"	–	–
>106–120	6"	6"	5 1/2"	4"	3 3/4"	–	–	–
>121–140	6"	6"	1/2"	3 3/4"	3 3/4"	–	–	–
>141–160	6"	6"	4"	3 3/4"	–	–	–	–

4" x 2" OR 4" x 1" BUILD-OUT MOUNT

4"x2" (E) / 4"x1" (E1)

MAX. A.S.D. DESIGN PRESSURE RATING RANGE	SLAT SPAN RANGE							
	0' to 4'	> 4' to 5'	> 5' to 6'	> 6' to 7'	> 7' to 9'	> 9' to 12'	> 12' to 16'	> 16' to 19'-8"
≤ 30.0	6" / 6"	6" / 6"	6" / 6"	8" / 8"	7" / 8"	4" / 5	3 3/4" / 3 3/4"	– / 3 3/4"
>31–40	6" / 6"	6" / 6"	6" / 6"	8" / 8"	5" / 6"	3 3/4" / 3 3/4"	3 3/4" / 3 3/4"	– / –
>41–60	6" / 6"	6" / 6"	6" / 6"	5" / 6 1/2"	3 3/4" / 4"	3 3/4" / 3 3/4"	– / 3 3/4"	– / –
>61–80	6" / 6"	6" / 6"	5 1/2" / 6"	3 3/4" / 4 1/2"	3 3/4" / 3 3/4"	– / 3 3/4"	– / –	– / –
>81–105	6" / 6"	6" / 6"	3 3/4" / 4 1/2"	3 3/4" / 3 3/4"	3 3/4" / 3 3/4"	– / –	– / –	– / –
>106–120	6" / 6"	6" / 6"	3 3/4" / 4"	3 3/4" / 3 3/4"	– / 3 3/4"	– / –	– / –	– / –
>121–140	6" / 6"	6" / 6"	3 3/4" / 3 3/4"	3 3/4" / 3 3/4"	– / –	– / –	– / –	– / –
>141–160	6" / 6"	6" / 6"	3 3/4" / 3 3/4"	– / 3 3/4"	– / –	– / –	– / –	– / –

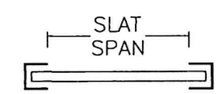

SLAT SPAN DEFINITION

♠ **NOTE:**

MAX. SPAN FOR SLAT FOR A GIVEN A.S.D. DESIGN PRESSURE RATING SHALL **NEVER** EXCEED MAX. SLAT SPAN INDICATED ON SLAT PERFORMANCE CHART ON SHEET 10.

FLORIDA BUILDING CODE. (High Velocity Hurricane Zone)

WALTER A. TILLIT JR. LICENSE No. 44167 STATE OF FLORIDA PROFESSIONAL ENGINEER

9/24/2026

P.E. SEAL/SIGNATURE/DATE

©2026 TILTECO INC.

TILTECO INC.
TILLIT TESTING & ENGINEERING COMPANY
6355 N.W. 36th. St., Ste. 305 – VIRGINIA GARDENS, Fl. 33166
Phone : (305) 871–1530 , Fax : (305) 871–1531
e–mail: tilteco@aol.com
CA–0006719
WALTER A. TILLIT Jr., P.E.
FLORIDA Lic. # 44167

RLL 55-X SLAT END RETENTION IMPACT PROTECTIVE SYSTEM (L.M.I)

ROLLAC SHUTTER OF TEXAS, INC.

5331 ORANGE STREET
PEARLAND, TX. 77581
PH:(281) 485-1911, FAX:(281) 485-0839

REV N°	DESCRIPTION	DATE	REV N°	DESCRIPTION	DATE
1	OLD 25–055	09/24/26	3		
2			4		

W.H
DRAWN BY

09/24/2026
DATE

26–301
DRAWING N°

MAX. ANCHOR'S SPACING SCHEDULE V FOR A GIVEN PRODUCT MOUNTING TYPE W/ ø 5/16" ITW BUILDEX TAPCON XL OR HILTI INC 3/8"ø S.S KWIK BOLT 3 ANCHORS TO GROUT FILLED CELL CONCRETE BLOCK WALL

A.S.D. DESIGN PRESSURE RATING & SLAT SPAN RANGE

WALL MOUNT

MAX. A.S.D. DESIGN PRESSURE RATING RANGE	SLAT SPAN RANGE							
	0' to 4'	> 4' to 5'	> 5' to 6'	> 6' to 7'	> 7' to 9'	> 9' to 12'	> 12' to 16'	> 16' to 17'-8"
≤ 30.0	6.0"	6.0"	6.0"	8"	8"	7"	4 1/2"	3 3/4"
>31–40	6.0"	6.0"	6.0"	8"	8"	5"	3 3/4"	–
>41–60	6.0"	6.0"	6.0"	8"	5 1/2"	4"	–	–
>61–80	6.0"	6.0"	6.0"	6"	3 3/4"	–	–	–
>81–105	6.0"	6.0"	6.0"	4"	3 3/4"	–	–	–
>106–120	6.0"	6.0"	5"	3 3/4"	–	–	–	–
>121–140	6.0"	6.0"	4"	3 3/4"	–	–	–	–
>141–160	6.0"	6.0"	4"	–	–	–	–	–

TRAPPED MOUNT

MAX. A.S.D. DESIGN PRESSURE RATING RANGE	SLAT SPAN RANGE							
	0' to 4'	> 4' to 5'	> 5' to 6'	> 6' to 7'	> 7' to 9'	> 9' to 12'	> 12' to 16'	> 16' to 17'-8"
≤ 30.0	6"	6"	6"	8"	8"	6 1/2"	4"	3 3/4"
>31–40	6"	6"	6"	8"	7 1/2"	5"	3 3/4"	–
>41–60	6"	6"	6"	7 1/2"	5"	3 3/4"	–	–
>61–80	6"	6"	6"	5 1/2"	3 3/4"	–	–	–
>81–105	6"	6"	5 1/2"	3 3/4"	3 3/4"	–	–	–
>106–120	6"	6"	4 1/2"	3 3/4"	–	–	–	–
>121–140	6"	6"	4"	3 3/4"	–	–	–	–
>141–160	6"	5"	3 3/4"	–	–	–	–	–

4" x 2" OR 4" x 1" BUILD-OUT MOUNT

4"x2" (E) / 4"x1" (E1)

MAX. A.S.D. DESIGN PRESSURE RATING RANGE	SLAT SPAN RANGE						
	0' to 4'	> 4' to 5'	> 5' to 6'	> 6' to 7'	> 7' to 9'	> 9' to 12'	> 12' to 16'
≤ 30.0	6" / 6"	6" / 6"	6" / 6"	8" / 8"	6 1/2" / 8"	3 3/4" / 5	– / 3 3/4'
>31–40	6" / 6"	6" / 6"	6" / 6"	8" / 8"	4 3/4" / 6"	3 3/4" / 3 3/4"	– / –
>41–60	6" / 6"	6" / 6"	6" / 6"	5" / 6 1/2"	3 3/4" / 3 3/4"	– / –	– / –
>61–80	6" / 6"	6" / 6"	5 1/2" / 6"	3 3/4" / 4 1/2"	– / –	– / –	– / –
>81–105	6" / 6"	6" / 6"	3 3/4" / 3 3/4"	3 3/4" / 3 3/4"	– / –	– / –	– / –
>106–120	6" / 6"	6" / 6"	– / 4"	3 3/4" / –	– / –	– / –	– / –
>121–140	6" / 6"	4 1/2" / 5 1/2"	– / 3 3/4"	– / –	– / –	– / –	– / –
>141–160	6" / 6"	4" / 4 1/2"	– / 3 3/4"	– / –	– / –	– / –	– / –

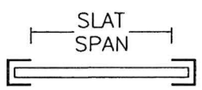

SLAT SPAN DEFINITION

♠ **NOTE:**

MAX. SPAN FOR SLAT FOR A GIVEN A.S.D. DESIGN PRESSURE RATING SHALL **NEVER** EXCEED MAX. SLAT SPAN INDICATED ON SLAT PERFORMANCE CHART ON SHEET 10.

FLORIDA BUILDING CODE. (High Velocity Hurricane Zone)

WALTER A. TILLIT JR. LICENSE No. 44167 STATE OF FLORIDA PROFESSIONAL ENGINEER

9/24/2026

P.E. SEAL/SIGNATURE/DATE

©2026 TILTECO INC.

TILTECO INC.
TILLIT TESTING & ENGINEERING COMPANY
6355 N.W. 36th. St., Ste. 305 – VIRGINIA GARDENS, Fl. 33166
Phone : (305) 871–1530 , Fax : (305) 871–1531
e–mail: tilteco@aol.com
CA–0006719
WALTER A. TILLIT Jr., P.E.
FLORIDA Lic. # 44167

RLL 55-X SLAT END RETENTION IMPACT PROTECTIVE SYSTEM (L.M.I)

ROLLAC SHUTTER OF TEXAS, INC.

5331 ORANGE STREET
PEARLAND, TX. 77581
PH:(281) 485-1911, FAX:(281) 485-0839

REV N°	DESCRIPTION	DATE	REV N°	DESCRIPTION	DATE
1	OLD 25–055	09/24/26	3		
2			4		

W.H
DRAWN BY

09/24/2026
DATE

26–301
DRAWING N°

SCHEDULE V:

Vx FORCES (Lb/ft) & **Vy** FORCES (Lb/ft) ACTING AT JAMBS FOR AN A.S.D. DESIGN PRESSURE RATING RANGE SLAT SPAN RANGE FOR POURED CONCRETE OR GROUT FILLED CELL CONCRETE BLOCK WALL BUILDINGS *

(USE MAXIMUM VALUE BETWEEN POSITIVE AND NEGATIVE A.S.D. LOAD)

MAX. A.S.D. DESIGN PRESSURE RATING RANGE	SLAT SPAN RANGE															
	0' to 4'		>4' to 5'		> 5' to 6'		> 6' to 7'		> 7' to 9'		> 9' to 12'		> 12' to 16'		>16' to 19'-8"	
	Vx	Vy	Vx	Vy	Vx	Vy	Vx	Vy	Vx	Vy	Vx	Vy	Vx	Vy	Vx	Vy
≤ 30.0	10	60	10	75	191	90	141	105	528	135	979	180	1523	240	2011	295
>31–40	10	80	10	100	20	120	319	140	764	180	1314	240	1994	320	2106	333
>41–60	10	120	10	150	312	180	658	210	1219	270	1955	360	2073	375	–	–
>61–80	10	153	26	197	585	240	983	280	1656	360	2094	417	–	–	–	–
>81–105	10	175	58	241	914	315	1375	368	2088	459	2088	425	–	–	–	–
>106–120	10	185	67	265	1106	360	1605	420	2061	480	–	–	–	–	–	–
>121–140	10	204	67	292	1358	420	1907	490	2036	508	–	–	–	–	–	–
>141–160	10	213	96	327	1606	480	2059	540	2055	525	–	–	–	–	–	–

*NOTE:

IT SHALL BE THE RESPONSIBILITY OF THE CONTRACTOR OR PERMIT HOLDER TO VERIFY THAT EXISTING STRUCTURE IS DESIGNED TO SUPPORT **Vx** AND **Vy** FORCES IN POUNDS PER UNIT FOOT OF PRODUCT HEIGHT AT BOTH JAMBS.
SEE THIS SHEET FOR **Vx** & **Vy** VALUES.

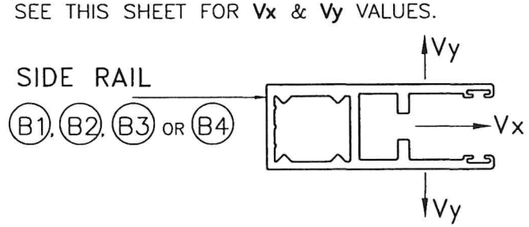

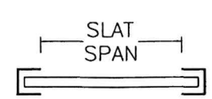

SLAT SPAN DEFINITION

WALTER A. TILLIT JR. LICENSE No. 44167 STATE OF FLORIDA PROFESSIONAL ENGINEER

P.E. SEAL/SIGNATURE/DATE

©2026 TILTECO INC.

TILTECO INC.
TILLIT TESTING & ENGINEERING COMPANY
6355 N.W. 36th. St., Ste. 305 – VIRGINIA GARDENS, Fl. 33166
Phone : (305) 871–1530 , Fax : (305) 871–1531
e–mail: tilteco@aol.com
CA–0006719
WALTER A. TILLIT Jr., P.E.
FLORIDA Lic. # 44167

FLORIDA BUILDING CODE. (High Velocity Hurricane Zone)

RLL 55-X SLAT END RETENTION IMPACT PROTECTIVE SYSTEM (L.M.I)

ROLLAC SHUTTER OF TEXAS, INC.

5331 ORANGE STREET
PEARLAND, TX. 77581
PH:(281) 485-1911, FAX:(281) 485-0839

REV N°	DESCRIPTION	DATE	REV N°	DESCRIPTION	DATE
1	OLD 25–055	09/24/26	3		
2			4		

W.H
DRAWN BY

09/24/2026
DATE

26–301
DRAWING N°

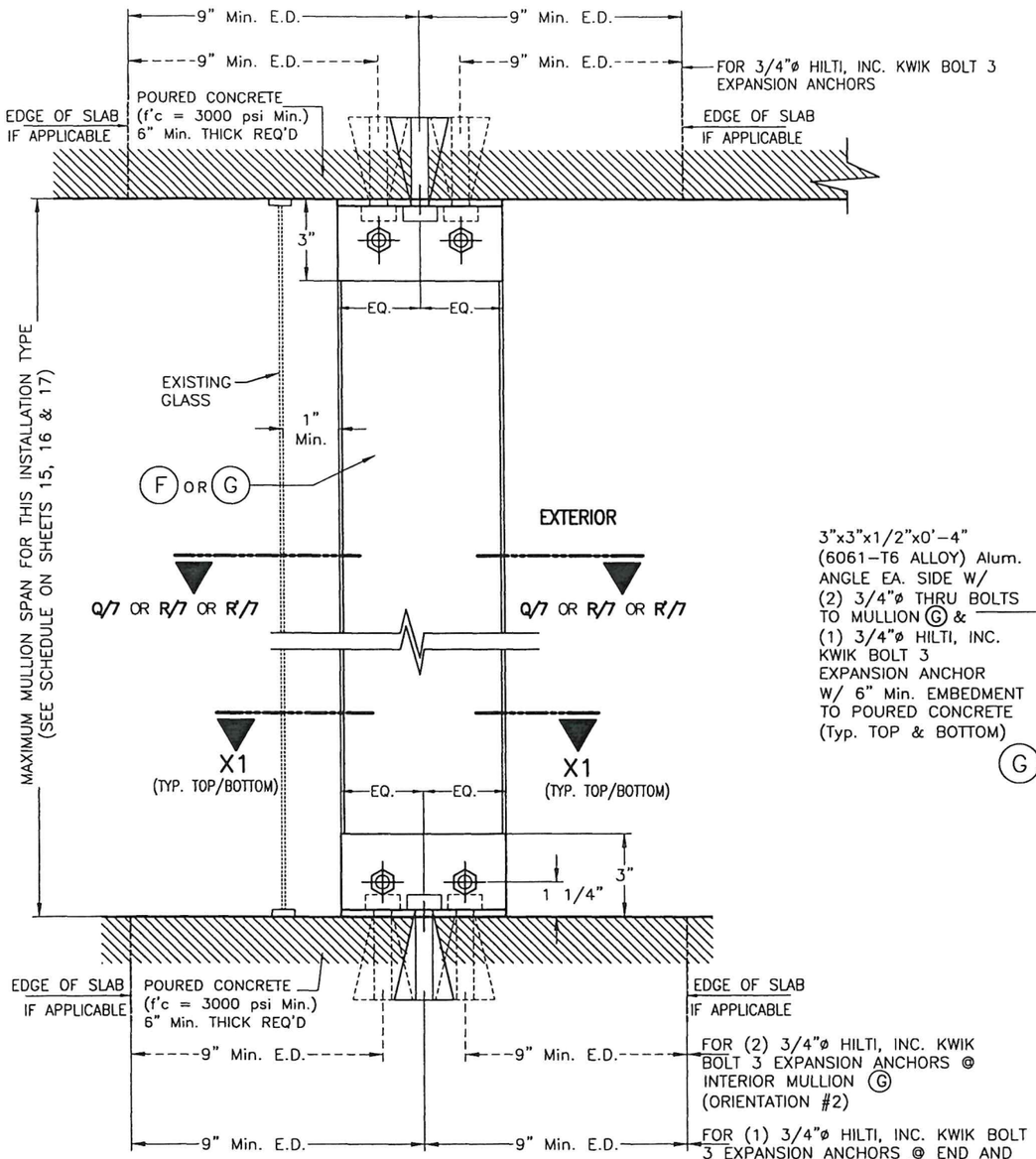

FLOOR TO CEILING/TRAPPED MOUNTING: MULLION F OR G SECTION W-1 *

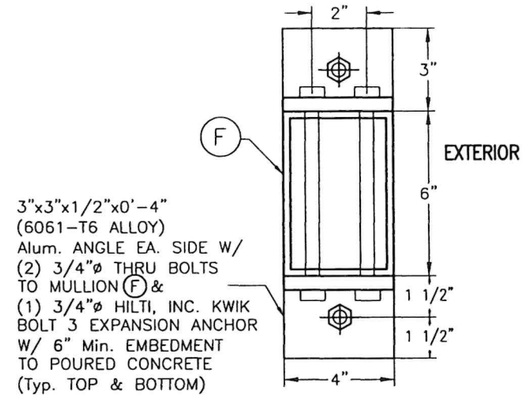

SECTION X1-X1 W/ F *

(END & INTERIOR MULLION W/ ORIENTATION # 1)

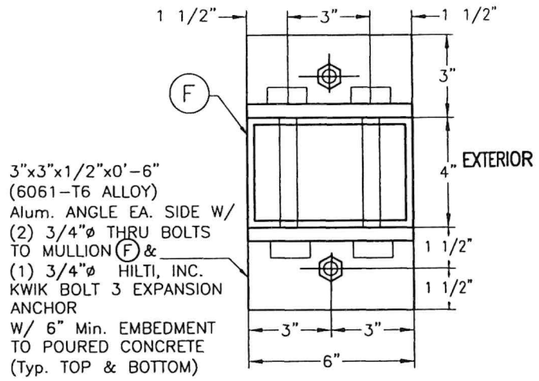

ALTERNATIVE SECTION X1-X1 W/ F *

(END & INTERIOR MULLION W/ ORIENTATION # 2)

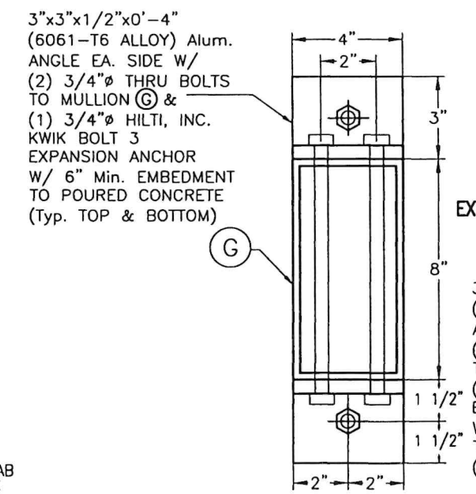

SECTION X1-X1 W/ G *

(END & INTERIOR MULLION W/ ORIENTATION # 1)

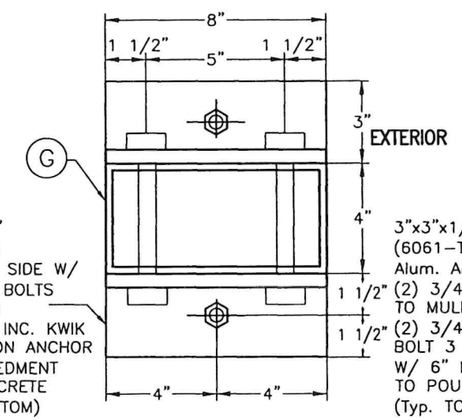

END MULLION ONLY

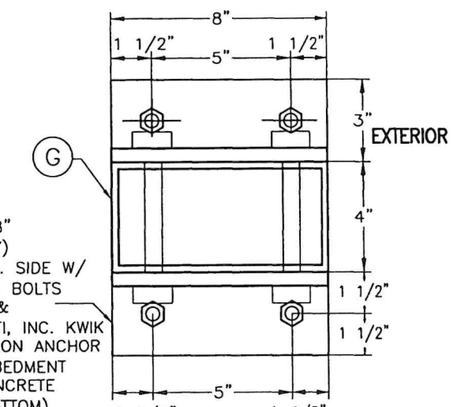

INTERIOR MULLION ONLY

ALTERNATIVE SECTION X1-X1 W/ G *

(W/ ORIENTATION # 2)

* SIDE RAILS B1 , B2 , B3 OR B4 AND BOX NOT SHOWN FOR CLARITY.

END & INTERIOR TRAPPED MOUNTED MULLION INSTALLATION

SCALE: 3/16" = 1"

FLORIDA BUILDING CODE. (High Velocity Hurricane Zone)

WALTER A. TILLIT JR. LICENSE No. 44167 STATE OF FLORIDA PROFESSIONAL ENGINEER

9/24/2026

P.E. SEAL/SIGNATURE/DATE

©2026 TILTECO INC.

TILTECO INC.
TILLIT TESTING & ENGINEERING COMPANY
6355 N.W. 36th. St., Ste. 305 – VIRGINIA GARDENS, Fl. 33166
Phone : (305) 871-1530 , Fax : (305) 871-1531
e-mail: tilteco@aol.com
CA-0006719
WALTER A. TILLIT Jr., P.E.
FLORIDA Lic. # 44167

RLL 55-X SLAT END RETENTION IMPACT PROTECTIVE SYSTEM (L.M.I)

ROLLAC SHUTTER OF TEXAS, INC.

5331 ORANGE STREET
PEARLAND, TX. 77581
PH:(281) 485-1911, FAX:(281) 485-0839

REV N°	DESCRIPTION	DATE	REV N°	DESCRIPTION	DATE
1	OLD 25-055	09/24/26	3		
2			4		

W.H
DRAWN BY

09/24/2026
DATE

26-301
DRAWING N°

SHEET 13 OF 19

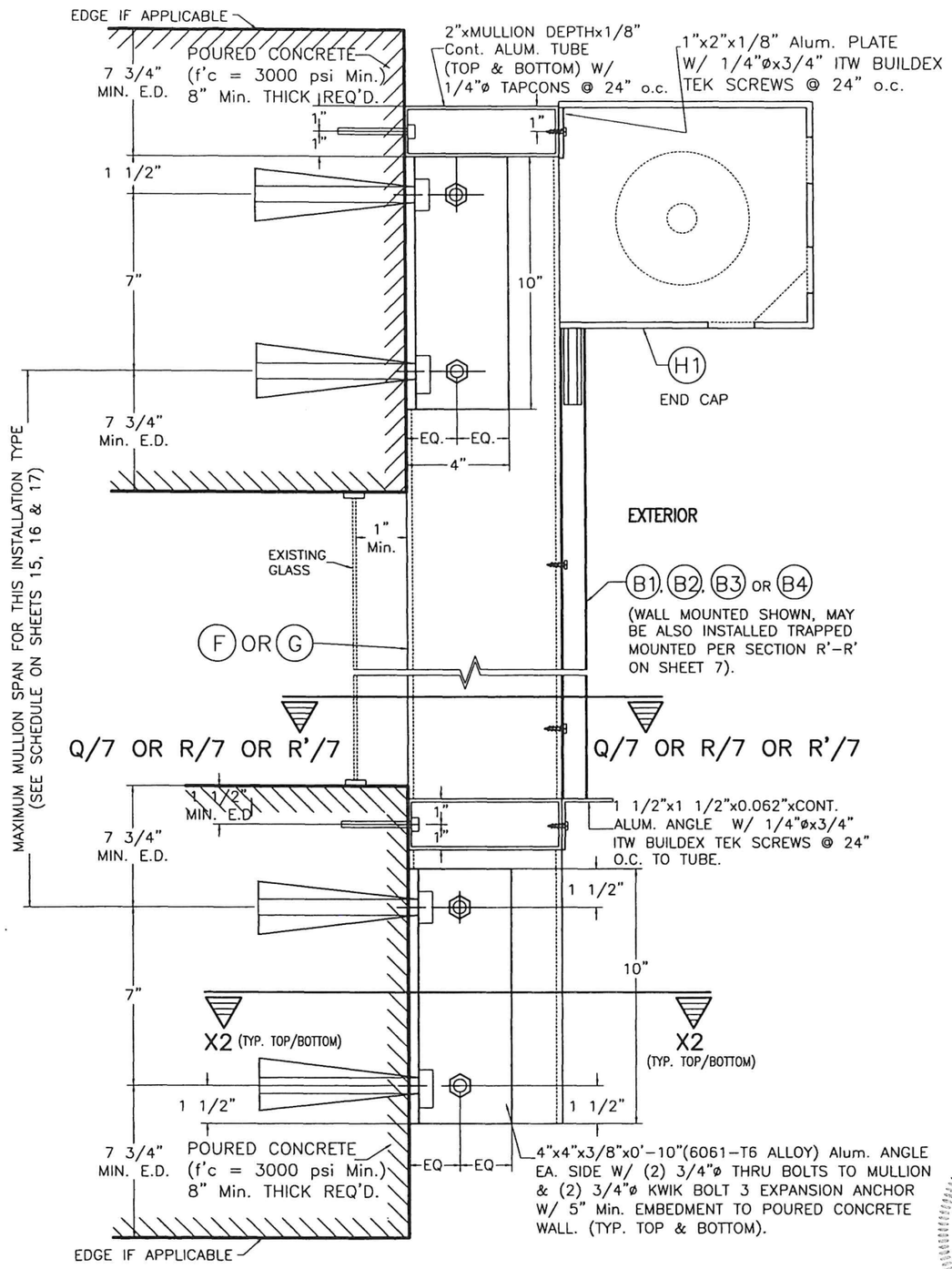

WALL MOUNTING : MULLION (F) OR (G)
POURED CONCRETE WALL
SECTION W-2

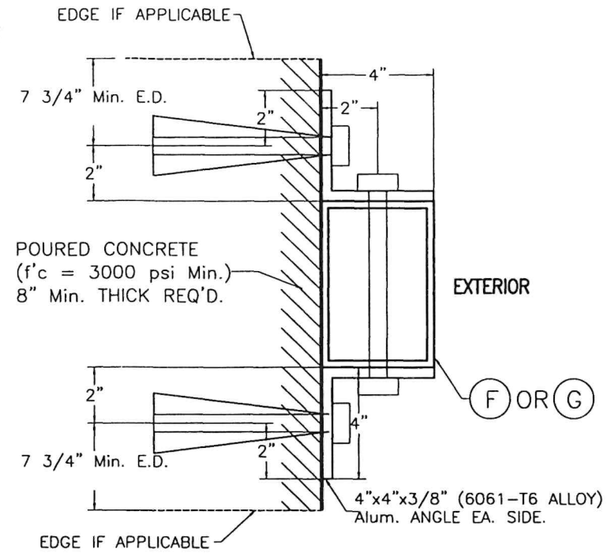

SECTION X2-X2 W/ (F) OR (G) *
(END & INTERIOR MULLION W/ ORIENTATION # 1)
(6"x4" OR 8"x4")

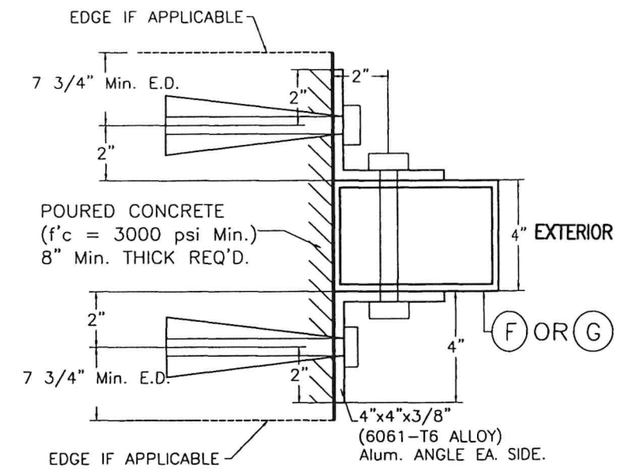

ALTERNATIVE SECTION X2-X2 W/ (F) OR (G) *
(END & INTERIOR MULLION W/ ORIENTATION # 2)
(4"x6" OR 4"x8")

* SIDE RAILS (B1), (B2), (B3) OR (B4) NOT SHOWN FOR CLARITY.

END & INTERIOR WALL MOUNTED MULLION INSTALLATION
SCALE: 1/8" = 1"

FLORIDA BUILDING CODE. (High Velocity Hurricane Zone)

WALTER A. TILLIT JR. LICENSE No. 44167 STATE OF FLORIDA PROFESSIONAL ENGINEER
9/24/2026
P.E. SEAL/SIGNATURE/DATE

©2026 TILTECO INC.

TILTECO INC.
TILLIT TESTING & ENGINEERING COMPANY
6355 N.W. 36th. St., Ste. 305 – VIRGINIA GARDENS, Fl. 33166
Phone : (305) 871-1530 , Fax : (305) 871-1531
e-mail: tilteco@aol.com
CA-0006719
WALTER A. TILLIT Jr., P.E.
FLORIDA Lic. # 44167

RLL 55-X SLAT END RETENTION
IMPACT PROTECTIVE SYSTEM (L.M.I)

ROLLAC SHUTTER OF TEXAS, INC.
5331 ORANGE STREET
PEARLAND, TX. 77581
PH:(281) 485-1911, FAX:(281) 485-0839

REV N°	DESCRIPTION	DATE	REV N°	DESCRIPTION	DATE
1	OLD 25-055	09/24/26	3		
2			4		

W.H
DRAWN BY

09/24/2026
DATE

26-301
DRAWING N°

SHEET 14 OF 19

SCHEDULE 1a
FLOOR TO CEILING (TRAPPED) MOUNTING
MAX. SPAN (ft.) FOR END AND INTERIOR MULLION FOR A GIVEN A.S.D. DESIGN PRESSURE RATING (p.s.f.) AND A MAX. MULLION SPACING (ft.) *
VALID ONLY FOR INSTALLATIONS INTO CONCRETE

MAX. A.S.D. DESIGN PRESSURE RATING (p.s.f.)	MAXIMUM MULLION SPACING (ft) *	MAXIMUM MULLION SPAN (ft.)							
		(F) 4"x6"x1/4" MULLION				(G) 4"x8"x1/4" MULLION			
		ORIENTATION #1 (▭) ‡		ORIENTATION #2 (▯) ‡		ORIENTATION #1 (▭) ‡		ORIENTATION #2 (▯) ‡	
		END	INTERIOR	END	INTERIOR	END	INTERIOR	END	INTERIOR
30.0	19'-8"	6'-9"	9'-9"	6'-2"	12'-0"	8'-1"	10'-7"	7'-1"	12'-0"
35.0	18'-3"	6'-7"	9'-6"	6'-1"	11'-9"	7'-10"	10'-4"	6'-11"	12'-0"
40.0	16'-8"	6'-7"	9'-5"	6'-1"	11'-7"	7'-10"	10'-2"	6'-11"	12'-0"
45.0	15'-3"	6'-7"	9'-3"	6'-1"	11'-6"	7'-10"	10'-1"	6'-11"	12'-0"
50.0	14'-3"	6'-7"	9'-2"	6'-0"	11'-4"	7'-9"	10'-0"	6'-11"	12'-0"
55.0	13'-3"	6'-7"	9'-1"	6'-1"	11'-3"	7'-10"	9'-11"	6'-11"	12'-0"
60.0	12'-6"	6'-7"	9'-0"	6'-0"	11'-2"	7'-9"	9'-10"	6'-11"	12'-0"
65.0	11'-11"	6'-6"	8'-11"	6'-0"	11'-1"	7'-9"	9'-8"	6'-11"	12'-0"
70.0	11'-5"	6'-6"	8'-10"	6'-0"	10'-11"	7'-8"	9'-7"	6'-10"	12'-0"
75.0	10'-11"	6'-6"	8'-9"	6'-0"	10'-10"	7'-8"	9'-6"	6'-10"	12'-0"
80.0	10'-5"	6'-6"	8'-9"	6'-0"	10'-9"	7'-8"	9'-6"	6'-10"	12'-0"
85.0	10'-0"	6'-5"	8'-8"	6'-0"	10'-8"	7'-8"	9'-5"	6'-10"	12'-0"
90.0	9'-6"	6'-6"	8'-8"	6'-0"	10'-8"	7'-9"	9'-5"	6'-11"	12'-0"
95.0	9'-3"	6'-6"	8'-7"	6'-0"	10'-7"	7'-8"	9'-4"	6'-10"	12'-0"
100.0	8'-11"	6'-6"	8'-6"	6'-0"	10'-7"	7'-8"	9'-3"	6'-11"	12'-0"
105.0	8'-9"	6'-5"	8'-5"	5'-11"	10'-5"	7'-7"	9'-2"	6'-10"	12'-0"
110.0	8'-6"	6'-5"	8'-4"	5'-11"	10'-4"	7'-7"	9'-1"	6'-10"	12'-0"
115.0	8'-3"	6'-5"	8'-4"	5'-11"	10'-4"	7'-7"	9'-1"	6'-10"	12'-0"
120.0	8'-0"	6'-5"	8'-4"	5'-11"	10'-3"	7'-7"	9'-0"	6'-10"	12'-0"
125.0	7'-10"	6'-5"	8'-3"	5'-11"	10'-2"	7'-7	9'-0"	6'-10"	12'-0"
130.0	7'-8"	6'-5"	8'-3"	5'-11"	10'-0"	7'-7"	8'-11"	6'-10"	12'-0"
135.0	7'-6"	6'-4"	8'-2"	5'-11"	9'-10"	7'-6 "	8'-10"	6'-9"	12'-0"
140.0	7'-3"	6'-5"	8'-2"	5'-11"	9'-9"	7'-7"	8'-10"	6'-10"	12'-0"
145.0	7'-2"	6'-4"	8'-1"	5'-11"	9'-7"	7'-6"	8'-10"	6'-10"	12'-0"
150.0	7'-0"	6'-4"	8'-1"	5'-11"	9'-5"	7'-6 "	8'-9"	6'-10"	12'-0"
155.0	6'-10"	6'-4"	8'-0"	5'-11"	9'-4"	7'-6"	8'-9"	6'-10"	12'-0"
160.0	6'-9"	6'-4"	8'-0"	5'-11"	9'-2"	7'-6"	8'-8"	6'-9"	12'-0"

SCHEDULE 2a
WALL MOUNTING
MAX. SPAN (ft.) FOR END AND INTERIOR MULLION FOR A GIVEN A.S.D. DESIGN PRESSURE RATING (p.s.f.) AND A MAX. MULLION SPACING (ft.) *
VALID ONLY FOR INSTALLATIONS INTO CONCRETE

MAX. A.S.D. DESIGN PRESSURE RATING (p.s.f.)	MAXIMUM MULLION SPACING (ft) *	MAXIMUM MULLION SPAN (ft.)							
		(F) 4"x6"x1/4" MULLION				(G) 4"x8"x1/4" MULLION			
		ORIENTATION #1 (▭) ‡		ORIENTATION #2 (▯) ‡		ORIENTATION #1 (▭) ‡		ORIENTATION #2 (▯) ‡	
		END	INTERIOR	END	INTERIOR	END	INTERIOR	END	INTERIOR
30.0	19'-8"	6'-9"	9'-9"	6'-2"	12'-0"	8'-1"	10'-7"	7'-1"	12'-0"
35.0	18'-3"	6'-7"	9'-6"	6'-1"	11'-9"	7'-10"	10'-4"	6'-11"	12'-0"
40.0	16'-8"	6'-7"	9'-5"	6'-1"	11'-7"	7'-10"	10'-2"	6'-11"	12'-0"
45.0	15'-3"	6'-7"	9'-3"	6'-1"	11'-6"	7'-10"	10'-1"	6'-11"	12'-0"
50.0	14'-3"	6'-7"	9'-2"	6'-0"	11'-4"	7'-9"	10'-0"	6'-11"	12'-0"
55.0	13'-3"	6'-7"	9'-1"	6'-1"	11'-3"	7'-10"	9'-11"	6'-11"	12'-0"
60.0	12'-6"	6'-7"	9'-0"	6'-0"	11'-2"	7'-9"	9'-10"	6'-11"	12'-0"
65.0	11'-11"	6'-6"	8'-11"	6'-0"	11'-1"	7'-9"	9'-8"	6'-11"	12'-0"
70.0	11'-5"	6'-6"	8'-10"	6'-0"	10'-11"	7'-8"	9'-7"	6'-10"	12'-0"
75.0	10'-11"	6'-6"	8'-9"	6'-0"	10'-10"	7'-8"	9'-6"	6'-10"	12'-0"
80.0	10'-5"	6'-6"	8'-9"	6'-0"	10'-9"	7'-8"	9'-6"	6'-10"	12'-0"
85.0	10'-0"	6'-5"	8'-8"	6'-0"	10'-8"	7'-8"	9'-5"	6'-10"	12'-0"
90.0	9'-6"	6'-6"	8'-8"	6'-0"	10'-8"	7'-9"	9'-5"	6'-11"	12'-0"
95.0	9'-3"	6'-6"	8'-7"	6'-0"	10'-7"	7'-8"	9'-4"	6'-10"	12'-0"
100.0	8'-11"	6'-6"	8'-6"	6'-0"	10'-7"	7'-8"	9'-3"	6'-11"	12'-0"
105.0	8'-9"	6'-5"	8'-5"	5'-11"	10'-5"	7'-7"	9'-2"	6'-10"	12'-0"
110.0	8'-6"	6'-5"	8'-5"	5'-11"	10'-4"	7'-7"	9'-1"	6'-10"	12'-0"
115.0	8'-3"	6'-5"	8'-4"	5'-11"	10'-4"	7'-7"	9'-1"	6'-10"	12'-0"
120.0	8'-0"	6'-5"	8'-4"	5'-11"	10'-3"	7'-7"	9'-0"	6'-10"	12'-0"
125.0	7'-10"	6'-4"	8'-3"	5'-11"	10'-3"	7'-7	9'-0"	6'-10"	12'-0"
130.0	7'-8"	6'-5"	8'-3"	5'-11"	10'-2"	7'-7"	8'-11"	6'-10"	12'-0"
135.0	7'-6"	6'-4"	8'-2"	5'-11"	10'-1"	7'-6 "	8'-10"	6'-9"	12'-0"
140.0	7'-3"	6'-5"	8'-2"	5'-11"	10'-1"	7'-7"	8'-10"	6'-10"	12'-0"
145.0	7'-2"	6'-4"	8'-1"	5'-11"	10'-0"	7'-6"	8'-10"	6'-10"	12'-0"
150.0	7'-0"	6'-4"	8'-1"	5'-11"	10'-0"	7'-6 "	8'-9"	6'-10"	12'-0"
155.0	6'-10"	6'-4"	8'-0"	5'-11"	9'-11"	7'-6"	8'-9"	6'-10"	12'-0"
160.0	6'-9"	6'-4"	8'-0"	5'-11"	9'-11"	7'-6"	8'-8"	6'-9"	12'-5"

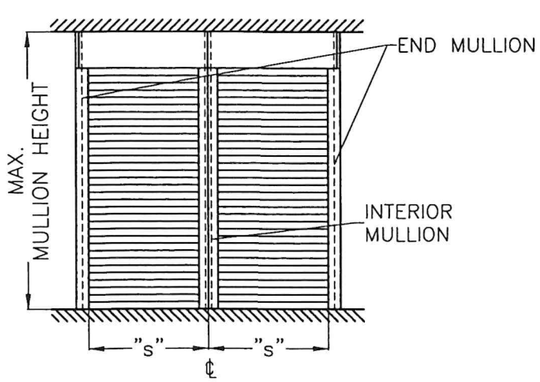

MULLION SPACING: "s"

* MAXIMUM MULLION SPACING SHALL BE SUCH THAT MAX SLAT SPAN FOR THAT A.S.D. DESIGN PRESSURE RATING SHALL NOT BE EXCEEDED.

‡ MULLION ORIENTATION IS AS SEEN FROM THE OUTSIDE (EXTERIOR) OF PRODUCT.

FLORIDA BUILDING CODE. (High Velocity Hurricane Zone)

WALTER A. TILLIT JR. LICENSE No. 44167 STATE OF FLORIDA PROFESSIONAL ENGINEER

09/24/2026

P.E. SEAL/SIGNATURE/DATE

©2026 TILTECO INC.

TILTECO INC.
TILLIT TESTING & ENGINEERING COMPANY
6355 N.W. 36th. St., Ste. 305 – VIRGINIA GARDENS, Fl. 33166
Phone : (305) 871-1530 , Fax : (305) 871-1531
e-mail: tilteco@aol.com
CA-0006719
WALTER A. TILLIT Jr., P.E.
FLORIDA Lic. # 44167

RLL 55-X SLAT END RETENTION IMPACT PROTECTIVE SYSTEM (L.M.I)

ROLLAC SHUTTER OF TEXAS, INC.

5331 ORANGE STREET
PEARLAND, TX. 77581
PH:(281) 485-1911, FAX:(281) 485-0839

REV N°	DESCRIPTION	DATE	REV N°	DESCRIPTION	DATE
1	OLD 25-055	09/24/26	3		
2			4		

W.H
DRAWN BY

09/24/2026
DATE

26-301
DRAWING N°

SHEET 15 OF 19

SCHEDULE 1b
FLOOR TO CEILING (TRAPPED) MOUNTING
MAX. SPAN (ft.) FOR END AND INTERIOR MULLION FOR A GIVEN A.S.D. DESIGN PRESSURE RATING (p.s.f.) AND A 12'-0" MAX. MULLION SPACING (ft.) *
VALID ONLY FOR INSTALLATIONS INTO CONCRETE

MAX. A.S.D. DESIGN PRESSURE RATING (p.s.f.)	MAXIMUM MULLION SPACING (ft) *	MAXIMUM MULLION SPAN (ft.)							
		(F) 4"x6"x1/4" MULLION				(G) 4"x8"x1/4" MULLION			
		ORIENTATION #1 (▭) ‡		ORIENTATION #2 (▯) ‡		ORIENTATION #1 (▭) ‡		ORIENTATION #2 (▯) ‡	
		END	INTERIOR	END	INTERIOR	END	INTERIOR	END	INTERIOR
30.0	12'-0"	9'-6"	11'-6"	8'-3"	12'-0"	11'-4"	12'-0"	9'-0"	12'-0"
35.0	12'-0"	8'-10"	10'-11"	7'-10"	12'-0"	10'-5"	11'-11"	8'-6"	12'-0"
40.0	12'-0"	8'-3"	10'-5"	7'-6"	12'-0"	9'-9"	11'-4"	9'-6"	12'-0"
45.0	12'-0"	7'-9"	10'-1"	7'-2"	12'-0"	9'-3"	10'-11"	9'-1"	12'-0"
50.0	12'-0"	7'-4"	9'-8"	6'-9"	12'-0"	8'-9"	10'-7"	8'-9"	12'-0"
55.0	12'-0"	7'-0"	9'-5"	6'-6"	11'-8"	8'-4"	10'-3"	8'-6"	12'-0"
60.0	12'-0"	6'-9"	9'-2"	6'-3"	11'-4"	8'-0"	9'-11"	8'-3"	12'-0"
65.0	12'-0"	6'-6"	8'-11"	6'-0"	11'-0"	7'-8"	9'-8"	8'-0"	12'-0"

SCHEDULE 2b
WALL MOUNTING
MAX. SPAN (ft.) FOR END AND INTERIOR MULLION FOR A GIVEN A.S.D. DESIGN PRESSURE RATING (p.s.f.) AND A 12'-0" MAX. MULLION SPACING (ft.) *
VALID ONLY FOR INSTALLATIONS INTO CONCRETE

MAX. A.S.D. DESIGN PRESSURE RATING (p.s.f.)	MAXIMUM MULLION SPACING (ft) *	MAXIMUM MULLION SPAN (ft.)							
		(F) 4"x6"x1/4" MULLION				(G) 4"x8"x1/4" MULLION			
		ORIENTATION #1 (▭) ‡		ORIENTATION #2 (▯) ‡		ORIENTATION #1 (▭) ‡		ORIENTATION #2 (▯) ‡	
		END	INTERIOR	END	INTERIOR	END	INTERIOR	END	INTERIOR
30.0	12'-0"	8'-3"	11'-6"	8'-3"	12'-0"	11'-4"	12'-0"	9'-0"	12'-0"
35.0	12'-0"	7'-10"	10'-11"	7'-10"	12'-0"	10'-5"	11'-11"	8'-6"	12'-0"
40.0	12'-0"	7'-6"	10'-5"	7'-6"	12'-0"	9'-9"	11'-4"	8'-2"	12'-0"
45.0	12'-0"	7'-2"	10'-1"	7'-2"	12'-0"	9'-3"	10'-11"	7'-10"	12'-0"
50.0	12'-0"	6'-9"	9'-8"	6'-9"	12'-0"	8'-9"	10'-7"	7'-7"	12'-0"
55.0	12'-0"	6'-6"	9'-5"	6'-6"	11'-8"	8'-4"	10'-3"	7'-4"	12'-0"
60.0	12'-0"	6'-3"	9'-2"	6'-3"	11'-4"	8'-0"	9'-11"	7'-1"	12'-0"
65.0	12'-0"	6'-0"	8'-11"	6'-0"	11'-0"	7'-8"	9'-8"	6'-10"	12'-0"

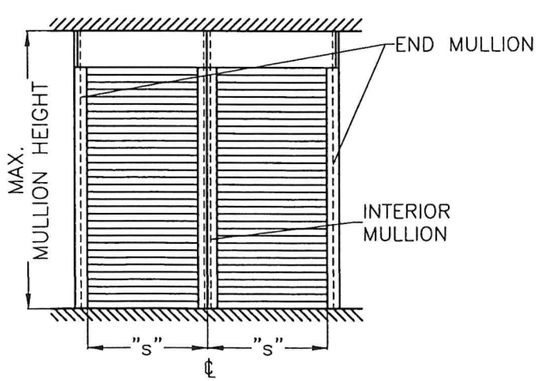

MULLION SPACING: "s"

* MAXIMUM MULLION SPACING SHALL BE SUCH THAT MAX SLAT SPAN FOR THAT A.S.D. DESIGN PRESSURE RATING SHALL NOT BE EXCEEDED.

‡ MULLION ORIENTATION IS AS SEEN FROM THE OUTSIDE (EXTERIOR) OF PRODUCT.

FLORIDA BUILDING CODE. (High Velocity Hurricane Zone)

WALTER A. TILLIT JR. LICENSE No. 44167 STATE OF FLORIDA PROFESSIONAL ENGINEER

P.E. SEAL/SIGNATURE/DATE

©2026 TILTECO INC.

TILTECO INC.
TILLIT TESTING & ENGINEERING COMPANY
6355 N.W. 36th. St., Ste. 305 – VIRGINIA GARDENS, Fl. 33166
Phone : (305) 871–1530 , Fax : (305) 871–1531
e–mail: tilteco@aol.com
CA–0006719
WALTER A. TILLIT Jr., P.E.
FLORIDA Lic. # 44167

RLL 55-X SLAT END RETENTION IMPACT PROTECTIVE SYSTEM (L.M.I)

ROLLAC SHUTTER OF TEXAS, INC.
5331 ORANGE STREET
PEARLAND, TX. 77581
PH:(281) 485-1911, FAX:(281) 485-0839

REV N°	DESCRIPTION	DATE	REV N°	DESCRIPTION	DATE
1	OLD 25–055	09/24/26	3		
2			4		

W.H
DRAWN BY

09/24/2026
DATE

26–301
DRAWING N°

SHEET 16 OF 19

SCHEDULE 1c
FLOOR TO CEILING (TRAPPED) MOUNTING
MAX. SPAN (ft.) FOR END AND INTERIOR MULLION FOR A GIVEN A.S.D. DESIGN PRESSURE RATING (p.s.f.) AND A 7'-0" MAX. MULLION * SPACING (ft.)
VALID ONLY FOR INSTALLATIONS INTO CONCRETE

MAX. A.S.D. DESIGN PRESSURE RATING (p.s.f.)	MAXIMUM MULLION SPACING (ft) *	MAXIMUM MULLION SPAN (ft.)							
		(F) 4"x6"x1/4" MULLION				(G) 4"x8"x1/4" MULLION			
		ORIENTATION #1 (▭) ‡		ORIENTATION #2 (▯) ‡		ORIENTATION #1 (▭) ‡		ORIENTATION #2 (▯) ‡	
		END	INTERIOR	END	INTERIOR	END	INTERIOR	END	INTERIOR
30.0	7'-0"	12'-0"	12'-0"	12'-0"	12'-0"	12'-0"	12'-0"	12'-0"	12'-0"
35.0	7'-0"	12'-0"	12'-0"	12'-0"	12'-0"	12'-0"	12'-0"	12'-0"	12'-0"
40.0	7'-0"	12'-0"	12'-0"	12'-0"	12'-0"	12'-0"	12'-0"	12'-0"	12'-0"
45.0	7'-0"	12'-0"	12'-0"	11'-1"	12'-0"	12'-0"	12'-0"	12'-0"	12'-0"
50.0	7'-0"	12'-0"	11'-7"	10'-5"	12'-0"	12'-0"	12'-0"	11'-3"	12'-0"
55.0	7'-0"	11'-7"	11'-3"	9'-10"	12'-0"	12'-0"	12'-0"	10'-8"	12'-0"
60.0	7'-0"	10'-11"	10'-11"	9'-5"	12'-0"	12'-0"	11'-11"	10'-3"	12'-0"
65.0	7'-0"	10'-4"	10'-8"	9'-1"	12'-0"	12'-0"	11'-7"	9'-10"	12'-0"
70.0	7'-0"	9'-10"	10'-5"	8'-9"	12'-0"	11'-7"	11'-3"	9'-6"	12'-0"
75.0	7'-0"	9'-5"	10'-2"	8'-6"	12'-0"	11'-2"	11'-0"	9'-3"	12'-0"
80.0	7'-0"	9'-1"	9'-11"	8'-3"	12'-4"	10'-8"	10'-10"	8'-11"	12'-0"
85.0	7'-0"	8'-9"	9'-9"	8'-0"	12'-1"	10'-4"	10'-7"	8'-9"	12'-0"
90.0	7'-0"	8'-5"	9'-7"	7'-10"	11'-10"	10'-0"	10'-5"	8'-6"	12'-0"
95.0	7'-0"	8'-2"	9'-5"	7'-8"	11'-7"	9'-8"	10'-2"	8'-4"	12'-0"
100.0	7'-0"	7'-10"	9'-3"	7'-5"	11'-5"	9'-5"	10'-0"	8'-2"	12'-0"
105.0	7'-0"	7'-9"	9'-1"	7'-2"	11'-3"	9'-1"	9'-10"	8'-0"	12'-0"
110.0	7'-0"	7'-6"	8'-11"	7'-0"	11'-1"	8'-11"	9'-9"	7'-10"	12'-0"
115.0	7'-0"	7'-4"	8'-10"	6'-10"	10'-11"	8'-8"	9'-7"	7'-9"	12'-0"
120.0	7'-0"	7'-2"	8'-8"	6'-8"	10'-9"	8'-6"	9'-5"	7'-7"	12'-0"
125.0	7'-0"	7'-0"	8'-7"	6'-6"	10'-7"	8'-3"	9'-4"	7'-6"	12'-0"
130.0	7'-0"	6'-10"	8'-5"	6'-5"	10'-6"	8'-1"	9'-2"	7'-4"	12'-0"
135.0	7'-0"	6'-9"	8'-4"	6'-3"	10'-4"	7'-11"	9'-1"	7'-2"	12'-0"
140.0	7'-0"	6'-7"	8'-3"	6'-2"	10'-1"	7'-9"	9'-0"	7'-1"	12'-0"
145.0	7'-0"	6'-6"	8'-2"	6'-0"	10'-9"	7'-8"	8'-10"	6'-11"	12'-0"
150.0	7'-0"	6'-4"	8'-1"	5'-11"	10'-5"	7'-6"	8'-9"	6'-10"	12'-0"

SCHEDULE 2c
WALL MOUNTING
MAX. SPAN (ft.) FOR END AND INTERIOR MULLION FOR A GIVEN A.S.D. DESIGN PRESSURE RATING (p.s.f.) AND A 7'-0" MAX. MULLION * SPACING (ft.)
VALID ONLY FOR INSTALLATIONS INTO CONCRETE

MAX. A.S.D. DESIGN PRESSURE RATING (p.s.f.)	MAXIMUM MULLION SPACING (ft) *	MAXIMUM MULLION SPAN (ft.)							
		(F) 4"x6"x1/4" MULLION				(G) 4"x8"x1/4" MULLION			
		ORIENTATION #1 (▭) ‡		ORIENTATION #2 (▯) ‡		ORIENTATION #1 (▭) ‡		ORIENTATION #2 (▯) ‡	
		END	INTERIOR	END	INTERIOR	END	INTERIOR	END	INTERIOR
30.0	7'-0"	12'-0"	12'-0"	12'-0"	12'-0"	12'-0"	12'-0"	12'-0"	12'-0"
35.0	7'-0"	12'-0"	12'-0"	12'-0"	12'-0"	12'-0"	12'-0"	12'-0"	12'-0"
40.0	7'-0"	12'-0"	12'-0"	12'-0"	12'-0"	12'-0"	12'-0"	12'-0"	12'-0"
45.0	7'-0"	12'-0"	12'-0"	11'-1"	12'-0"	12'-0"	12'-0"	12'-0"	12'-0"
50.0	7'-0"	12'-0"	11'-7"	10'-5"	12'-0"	12'-0"	12'-0"	11'-3"	12'-0"
55.0	7'-0"	11'-7"	11'-3"	9'-10"	12'-0"	12'-0"	12'-0"	10'-8"	12'-0"
60.0	7'-0"	10'-11"	10'-11"	9'-5"	12'-0"	12'-0"	11'-11"	10'-3"	12'-0"
65.0	7'-0"	10'-4"	10'-8"	9'-1"	12'-0"	12'-0"	11'-7"	9'-10"	12'-0"
70.0	7'-0"	9'-10"	10'-5"	8'-9"	12'-0"	11'-7"	11'-3"	9'-6"	12'-0"
75.0	7'-0"	9'-5"	10'-2"	8'-6"	12'-0"	11'-2"	11'-0"	9'-3"	12'-0"
80.0	7'-0"	9'-1"	9'-11"	8'-3"	12'-0"	10'-8"	10'-10"	8'-11"	12'-0"
85.0	7'-0"	8'-9"	9'-9"	8'-0"	12'-0"	10'-4"	10'-7"	8'-9"	12'-0"
90.0	7'-0"	8'-5"	9'-7"	7'-10"	11'-10"	10'-0"	10'-5"	8'-6"	12'-0"
95.0	7'-0"	8'-2"	9'-5"	7'-8"	11'-7"	9'-8"	10'-2"	8'-4"	12'-0"
100.0	7'-0"	7'-10"	9'-3"	7'-5"	11'-5"	9'-5"	10'-0"	8'-2"	12'-0"
105.0	7'-0"	7'-9"	9'-1"	7'-2"	11'-3"	9'-1"	9'-10"	8'-0"	12'-0"
110.0	7'-0"	7'-6"	8'-11"	7'-0"	11'-1"	8'-11"	9'-9"	7'-10"	12'-0"
115.0	7'-0"	7'-4"	8'-10"	6'-10"	10'-11"	8'-8"	9'-7"	7'-9"	12'-0"
120.0	7'-0"	7'-2"	8'-8"	6'-8"	10'-9"	8'-6"	9'-5"	7'-7"	12'-0"
125.0	7'-0"	7'-0"	8'-7"	6'-6"	10'-7"	8'-3"	9'-4"	7'-6"	12'-0"
130.0	7'-0"	6'-10"	8'-5"	6'-5"	10'-6"	8'-1"	9'-2"	7'-4"	12'-0"
135.0	7'-0"	6'-9"	8'-4"	6'-3"	10'-4"	7'-11"	9'-1"	7'-2"	12'-0"
140.0	7'-0"	6'-7"	8'-3"	6'-2"	10'-3"	7'-9"	9'-0"	7'-1"	12'-0"
145.0	7'-0"	6'-6"	8'-2"	6'-0"	10'-1"	7'-8"	8'-10"	6'-11"	12'-0"
150.0	7'-0"	6'-4"	8'-1"	5'-11"	10'-0"	7'-6"	8'-9"	6'-10"	12'-0"

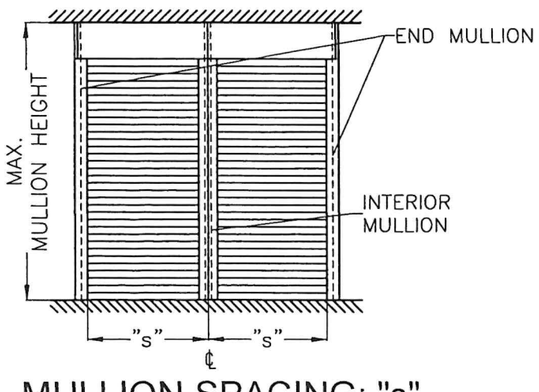

MULLION SPACING: "s"

* MAXIMUM MULLION SPACING SHALL BE SUCH THAT MAX SLAT SPAN FOR THAT A.S.D. DESIGN PRESSURE RATING SHALL NOT BE EXCEEDED.

‡ MULLION ORIENTATION IS AS SEEN FROM THE OUTSIDE (EXTERIOR) OF PRODUCT.

FLORIDA BUILDING CODE. (High Velocity Hurricane Zone)

WALTER A. TILLIT JR. LICENSE No. 44167 STATE OF FLORIDA PROFESSIONAL ENGINEER

P.E. SEAL/SIGNATURE/DATE

©2026 TILTECO INC.

TILTECO INC.
TILLIT TESTING & ENGINEERING COMPANY
6355 N.W. 36th. St., Ste. 305 – VIRGINIA GARDENS, Fl. 33166
Phone : (305) 871-1530 , Fax : (305) 871-1531
e-mail: tilteco@aol.com
CA-0006719
WALTER A. TILLIT Jr., P.E.
FLORIDA Lic. # 44167

RLL 55-X SLAT END RETENTION IMPACT PROTECTIVE SYSTEM (L.M.I)

ROLLAC SHUTTER OF TEXAS, INC.
5331 ORANGE STREET
PEARLAND, TX. 77581
PH:(281) 485-1911, FAX:(281) 485-0839

REV N°	DESCRIPTION	DATE	REV N°	DESCRIPTION	DATE
1	OLD 25-055	09/24/26	3		
2			4		

W.H
DRAWN BY

09/24/2026
DATE

26-301
DRAWING N°

SHEET 17 OF 19

SLAT PERFORMANCE CHARTS Ib, IIb & IIIb: (SEE GENERAL NOTE 6 ON SHEET 1)

FOR A GIVEN A.S.D. DESIGN PRESSURE RATING (p.s.f.) AND PRODUCT MOUNT CONDITION PER DETAIL 1 BELOW

CHART **Ib**: (ONLY VALID FOR 3/16" SLIP)

USE MAXIMUM VALUE BETWEEN POSITIVE AND NEGATIVE A.S.D. LOAD								USE MAXIMUM POSITIVE A.S.D. LOAD VALUE
MAX. A.S.D. DESIGN PRESSURE RATING (p.s.f.)	MAX. SLAT SPAN "LMAX." (ft)						MIN. SLAT SPAN "LMIN." (ft)	REQUIRED MIN. SEPARATION TO GLASS MESURED TO BACK OF SLAT (in)
	WALL MOUNT (SEE NOTES Δ)			BUILD-OUT MOUNT W/ E2 (SEE NOTES Δ)			WALL & BUILD-OUT MOUNT W/ E2 G=0.36*, G=0.46* G=0.55* (SEE NOTES Δ)	
	G=0.55 *	G=0.46 *	G=0.36 *	G=0.55 *	G=0.46 *	G=0.36 *		
30.0	11'-11"	11'-5"	10'-3"	10'-2"	9'-4"	8'-4"	6'-6"	8 3/4"
35.0	11'-1"	10'-5"	–	9'-4"	8'-7"	–	6'-3"	
40.0	10'-3"	9'-7"	–	8'-8"	8'-0"	–	6'-0"	
45.0	9'-7"	–	–	8'-2"	–	–	5'-9"	
50.0	9'-0"	–	–	7'-9"	–	–	5'-7"	
55.0	8'-6"	–	–	7'-4"	–	–	5'-6"	
60.0	8'-2"	–	–	7'-1"	–	–	5'-4"	

*: G=0.55, APPLICABLE TO SOUTHERN YELLOW PINE #2 WOOD GRADE
G=0.46, APPLICABLE TO DOUGLAS FIR-SOUTH WOOD GRADE
G=0.36, APPLICABLE TO SPRUCE PINE-FIR SOUTH WOOD GRADE

CHART **IIb**: (ONLY VALID FOR 1/8" SLIP)

USE MAXIMUM VALUE BETWEEN POSITIVE AND NEGATIVE A.S.D. LOAD								USE MAXIMUM POSITIVE A.S.D. LOAD VALUE
MAX. A.S.D. DESIGN PRESSURE RATING (p.s.f.)	MAX. SLAT SPAN "LMAX." (ft)						REQUIRED MIN. SLAT SPAN "LMIN." (ft)	REQUIRED MIN. SEPARATION TO GLASS MESURED TO BACK OF SLAT (in)
	WALL MOUNT (SEE NOTES Δ)			BUILD-OUT MOUNT W/ E2 (SEE NOTES Δ)			WALL & BUILD-OUT MOUNT W/ E2 G=0.36*, G=0.46* G=0.55* (SEE NOTES Δ)	
	G=0.55 *	G=0.46 *	G=0.36 *	G=0.55 *	G=0.46 *	G=0.36 *		
30.0	10'-8"	10'-3"	9'-4"	9'-2"	8'-6"	7'-8"	6'-2"	8 3/4"
35.0	10'-0"	9'-5"	–	8'-6"	7'-10"	–	5'-10"	
40.0	9'-3"	8'-8"	–	7'-11"	7'-4"	–	5'-8"	
45.0	8'-8"	–	–	7'-5"	–	–	5'-6"	
50.0	8'-2"	–	–	7'-1"	–	–	5'-4"	
55.0	7'-8"	–	–	6'-8"	–	–	5'-2"	
60.0	7'-5"	–	–	6'-6"	–	–	5'-0"	

CHART **IIIb**: (LESS THAN 1/8" SLIP)

USE MAXIMUM VALUE BETWEEN POSITIVE AND NEGATIVE A.S.D. LOAD			USE MAXIMUM POSITIVE A.S.D. LOAD VALUE
MAX. A.S.D. DESIGN PRESSURE RATING (p.s.f.)	MAX. SLAT SPAN "LMAX." (FT)	MIN. SLAT SPAN "LMIN." (FT)	REQUIRED MIN. SEPARATION TO GLASS MESURED TO BACK OF SLAT (in)
	WALL & BUILD-OUT MOUNT W/ E2 G=0.36*, G=0.46* G=0.55* (SEE NOTES Δ)	WALL & BUILD-OUT MOUNT W/ E2 G=0.36*, G=0.46* G=0.55* (SEE NOTES Δ)	
30.0	6'-0"	0'-0"	6 1/2"
35.0	5'-9"		
40.0	5'-5"		
45.0	5'-1"		
50.0	4'-10"		
55.0	4'-7"		
60.0	4'-5"		

Δ NOTES:

1. ABOVE INDICATED MAX. SLAT SPANS MAY BE USED AS LONG AS ANCHOR SPACING SCHEDULES ON SHEET 19 INDICATE THAT A SPACING IS AVAILABLE FOR THE CORRESPONDING SLAT SPAN AND A.S.D. DESIGN PRESSURE RATING.

†: WOOD FRAME WALL TO BE BUILT STRICTLY IN ACCORDANCE WITH SPECS GIVEN ON DETAIL 1 AND PROVISIONS FROM CHAPTER 23 OF THE FLORIDA BUILDING CODE. MIN. WALL LENGTH AT EITHER SIDE OF OPENING MUST BE 33 INCHES.

2. INSTALLATIONS VALID ONLY FOR PRODUCT WITHOUT MULLIONS

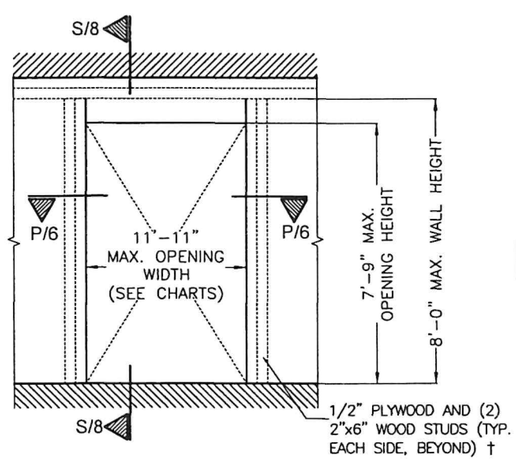

DETAIL 1 (ELEVATION)

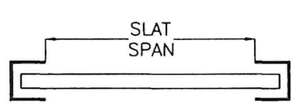

SLAT SPAN DEFINITION

INSTALLATIONS INTO WOOD FRAME STRUCTURES

FLORIDA BUILDING CODE. (High Velocity Hurricane Zone)

WALTER A. TILLIT JR. LICENSE No. 44167 STATE OF FLORIDA PROFESSIONAL ENGINEER

P.E. SEAL/SIGNATURE/DATE

©2026 TILTECO INC.

TILTECO INC.
TILLIT TESTING & ENGINEERING COMPANY
6355 N.W. 36th. St., Ste. 305 – VIRGINIA GARDENS, Fl. 33166
Phone : (305) 871-1530 , Fax : (305) 871-1531
e-mail: tilteco@aol.com
CA-0006719
WALTER A. TILLIT Jr., P.E.
FLORIDA Lic. # 44167

RLL 55-X SLAT END RETENTION IMPACT PROTECTIVE SYSTEM (L.M.I)

ROLLAC SHUTTER OF TEXAS, INC.
5331 ORANGE STREET
PEARLAND, TX. 77581
PH:(281) 485-1911, FAX:(281) 485-0839

REV N°	DESCRIPTION	DATE	REV N°	DESCRIPTION	DATE
1	OLD 25-055	09/24/26	3		
2			4		

W.H
DRAWN BY

09/24/2026
DATE

26-301
DRAWING N°

SHEET 18 OF 19

MAX. ANCHOR'S SPACING SCHEDULE VI FOR A GIVEN PRODUCT MOUNTING TYPE W/ ø 5/16" DEWALT ULTRACON SS4 ANCHORS TO WOOD GRADE, A.S.D. DESIGN PRESSURE RATING (psf) AND * SLAT SPAN RANGE

WALL MOUNT
TO 2"x6" WOOD STUD WITH MINIMUM 1/2" PLYWOOD

(SEE DETAIL 1 ON SHEET 18)

WOOD GRADE	MAX. A.S.D DESIGN PRESSURE RATING RANGE	SLAT SPAN RANGE						
		0' to 4' *	> 4' to 5' *	> 5' to 6' *	> 6' to 7' *	> 7' to 9' *	> 9' to 10' *	> 10' to 11'-11"*
SOUTHERN PINE #2 (G=0.55)	≤ 30.0	6"	6"	6"	6"	6"	4"	3"
	40	6"	6"	6"	6"	4"	3"	3"
	50	6"	6"	6"	6"	3"	–	–
	60	6"	6"	6"	4"	3"	–	–
DOUGLAS-FIR-SOUTH (G=0.46)	≤ 30.0	6"	6"	6"	6"	5"	4"	3"
	40	6"	6"	6"	6"	4"	3"	–
SPRUCE PINE-FIR-SOUTH (G=0.36)	≤ 30.0	6"	6"	6"	6"	4"	3"	3"

BUILD-OUT MOUNT
TO 2"x6" WOOD STUD WITH MINIMUM 1/2" PLYWOOD

(SEE DETAIL 1 ON SHEET 18)

WOOD GRADE	MAX. A.S.D DESIGN PRESSURE RATING RANGE	SLAT SPAN RANGE						
		0' to 4' * BUILD-OUT MOUNT W/ E2	> 4' to 5' * BUILD-OUT MOUNT W/ E2	> 5' to 6' * BUILD-OUT MOUNT W/ E2	> 6' to 7' * BUILD-OUT MOUNT W/ E2	> 7' to 9' * BUILD-OUT MOUNT W/ E2	> 9' to 10' * BUILD-OUT MOUNT W/ E2	> 10' to 11'-11"* BUILD-OUT MOUNT W/ E2
SOUTHERN PINE #2 (G=0.55)	≤ 30.0	6"	6"	6"	6"	4"	3"	–
	40	6"	6"	6"	6"	3"	–	–
	50	6"	6"	6"	4"	3"	–	–
	60	6"	6"	6"	3"	3"	–	–
DOUGLAS-FIR-SOUTH (G=0.46)	≤ 30.0	6"	6"	6"	6"	3"	3"	–
	40	6"	6"	6"	5"	3"	–	–
SPRUCE PINE-FIR-SOUTH (G=0.36)	≤ 30.0	6"	6"	6"	6"	3"	–	–

* NOTE:
MAX. SPAN FOR SLAT FOR A GIVEN A.S.D. DESIGN PRESSURE RATING SHALL **NEVER** EXCEED MAX. SLAT SPAN INDICATED ON SLAT PERFORMANCE CHARTS ON SHEET 18.

FLORIDA BUILDING CODE. (High Velocity Hurricane Zone)

WALTER A. TILLIT JR. LICENSE No. 44167 STATE OF FLORIDA PROFESSIONAL ENGINEER

P.E. SEAL/SIGNATURE/DATE

©2026 TILTECO INC.

TILTECO INC.
TILLIT TESTING & ENGINEERING COMPANY
6355 N.W. 36th. St., Ste. 305 – VIRGINIA GARDENS, Fl. 33166
Phone : (305) 871-1530 , Fax : (305) 871-1531
e-mail: tilteco@aol.com
CA-0006719
WALTER A. TILLIT Jr., P.E.
FLORIDA Lic. # 44167

RLL 55-X SLAT END RETENTION IMPACT PROTECTIVE SYSTEM (L.M.I)

ROLLAC SHUTTER OF TEXAS, INC.

5331 ORANGE STREET
PEARLAND, TX. 77581
PH:(281) 485-1911, FAX:(281) 485-0839

REV N°	DESCRIPTION	DATE	REV N°	DESCRIPTION	DATE
1	OLD 25-055	09/24/26	3		
2			4		

W.H
DRAWN BY

09/24/2026
DATE

26-301
DRAWING N°